ASME BPVC.X-2019

SECTION X

2019 ASME Boiler and Pressure Vessel Code

An International Code

Fiber-Reinforced Plastic Pressure Vessels

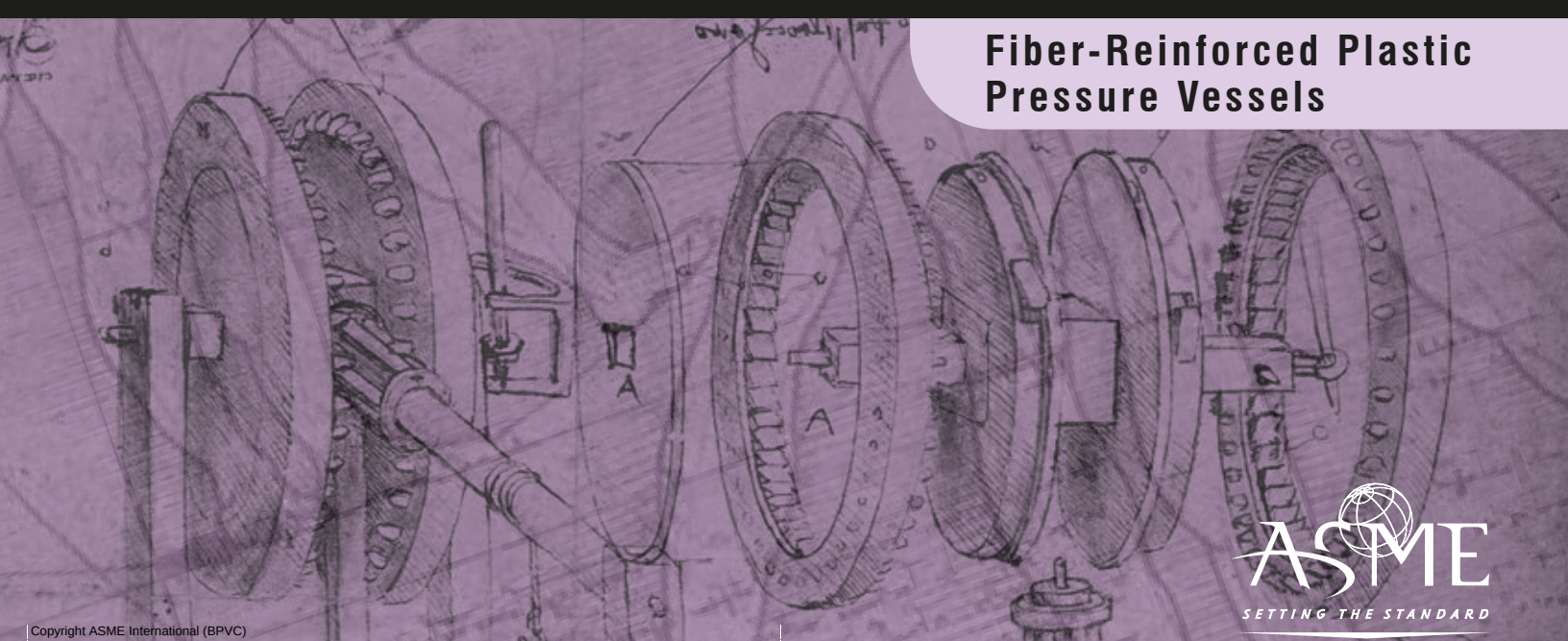

ASME
SETTING THE STANDARD

Copyright ASME International (BPVC)

Markings such as “ASME,” “ASME Standard,” or any other marking including “ASME,” ASME logos, or the ASME Single Certification Mark shall not be used on any item that is not constructed in accordance with all of the applicable requirements of the Code or Standard. Use of ASME’s name or logos or of the ASME Single Certification Mark requires formal ASME certification; if no certification program is available, such ASME markings may not be used. (For Certification and Accreditation Programs, see https://www.asme.org/shop/certification-accreditation.)

Items produced by parties not formally possessing an ASME Certificate may not be described, either explicitly or implicitly, as ASME certified or approved in any code forms or other document.

--`,```,,,,,````-`-`,,`,,`,`,,`---

Copyright ASME International (BPVC)

AN INTERNATIONAL CODE

2019 ASME Boiler & Pressure Vessel Code

2019 Edition July 1, 2019

X
FIBER-REINFORCED PLASTIC PRESSURE VESSELS

ASME Boiler and Pressure Vessel Committee
on Fiber-Reinforced Plastic Pressure Vessels

The American Society of Mechanical Engineers

Two Park Avenue • New York, NY • 10016 USA

--`,```,,,,,````,,`,``,,`,`,`-`-`,,`,,`,`,,`---

Copyright ASME International (BPVC)

Date of Issuance: July 1, 2019

This international code or standard was developed under procedures accredited as meeting the criteria for American National Standards and it is an American National Standard. The Standards Committee that approved the code or standard was balanced to assure that individuals from competent and concerned interests have had an opportunity to participate. The proposed code or standard was made available for public review and comment that provides an opportunity for additional public input from industry, academia, regulatory agencies, and the public-at-large.

ASME does not “approve," "certify," “rate,” or “endorse” any item, construction, proprietary device, or activity.

ASME does not take any position with respect to the validity of any patent rights asserted in connection with any items mentioned in this document, and does not undertake to insure anyone utilizing a standard against liability for infringement of any applicable letters patent, nor assume any such liability. Users of a code or standard are expressly advised that determination of the validity of any such patent rights, and the risk of infringement of such rights, is entirely their own responsibility.

Participation by federal agency representative(s) or person(s) affiliated with industry is not to be interpreted as government or industry endorsement of this code or standard.

ASME accepts responsibility for only those interpretations of this document issued in accordance with the established ASME procedures and policies, which precludes the issuance of interpretations by individuals.

The endnotes and preamble in this document (if any) are part of this American National Standard.

ASME Collective Membership Mark

ASME Single Certification Mark

"ASME" and the above ASME symbols are registered trademarks of The American Society of Mechanical Engineers.

No part of this document may be reproduced in any form, in an electronic retrieval system or otherwise, without the prior written permission of the publisher.

Library of Congress Catalog Card Number: 56-3934
Printed in the United States of America

Adopted by the Council of The American Society of Mechanical Engineers, 1914; latest edition 2019.

The American Society of Mechanical Engineers
Two Park Avenue, New York, NY 10016-5990

Copyright © 2019 by
THE AMERICAN SOCIETY OF MECHANICAL ENGINEERS
All rights reserved

Copyright ASME International (BPVC)

TABLE OF CONTENTS

List of Sections xv

Foreword xvii

Statement of Policy on the Use of the ASME Single Certification Mark and Code Authorization in Advertising xix

Statement of Policy on the Use of ASME Marking to Identify Manufactured Items xix

Submittal of Technical Inquiries to the Boiler and Pressure Vessel Standards Committees xx

Personnel xxiii

Introduction xlv

Summary of Changes xlix

List of Changes in Record Number Order li

Cross-Referencing and Stylistic Changes in the Boiler and Pressure Vessel Code lii

Part RG	**General Requirements**	1
Article RG-1	**Scope and Jurisdiction**	1
RG-100	Scope	1
RG-110	Application Limitations	1
RG-120	Jurisdiction of Section X	2
Article RG-2	**Organization**	3
RG-200	Organization of This Section	3
Article RG-3	**Responsibilities and Duties**	4
RG-300	Responsibilities and Duties	4
RG-310	User's Responsibilities — Design Specification	4
RG-320	Fabricator's Responsibilities	4
RG-330	Inspector's Duties	6
Article RG-4	**Fabrication Methods**	7
RG-400	Fabrication Methods	7
Part RM	**Material Requirements**	8
Article RM-1	**General Requirements**	8
RM-100	Laminate Materials	8
RM-110	Fiber System	8
RM-120	Resin System	8
RM-140	Use of Two or More Materials Specifications or Processes in Fabricating a Class I Vessel	10
RM-150	Mechanical Properties of Lamina for Class II Vessels	10
Article RM-2	**Miscellaneous Pressure Parts**	11
RM-200	General Requirements	11
RM-210	Miscellaneous Metallic Parts	11
Part RD	**Design Requirements**	12

Copyright ASME International (BPVC)

Article RD-1	**General**	12
RD-100	Scope	12
RD-110	Definitions	12
RD-120	Loadings	13
RD-130	Design Restrictions	14
RD-140	Design Allowances for Degradation	14
RD-150	Methods of Fabrication in Combination	14
RD-160	Proof of Design Adequacy	14
Article RD-2	**Shells of Revolution Under Internal Pressure**	15
RD-200	General	15
Article RD-3	**Shells of Revolution Under External Pressure**	16
RD-300	General	16
RD-310	Qualification of Vessels for External Pressure Service	16
Article RD-4	**Secondary Bonding**	17
RD-400	Design of Secondary Bonded Joints	17
Article RD-5	**Openings and Their Reinforcement**	18
RD-500	General	18
RD-510	Qualification	18
RD-520	Restrictions for Class II Vessels	18
Article RD-6	**Nozzles and Other Connections**	19
RD-600	General	19
RD-610	Qualifications	19
RD-620	Integral Flanged Nozzles for Class II Vessels	19
Article RD-7	**Bolted Connections**	27
RD-700	Flat Heads, Covers, and Blind Flanges	27
RD-710	Bolted Flanged Connections	27
RD-720	Openings in Flat Metallic Heads, Metallic Covers, and Metallic Blind Flanges	28
RD-730	Welded or Brazed Connections to Metal Flat Heads, Covers, or Blind Flanges	28
Article RD-8	**Quick-Actuating Closures (for Class I Vessels Only)**	29
RD-800	General Design Requirements	29
Article RD-9	**Attachments and Supports**	30
RD-900	General	30
RD-910	Qualification	30
Article RD-10	**Access and Inspection Openings**	31
RD-1000	General Requirements	31
RD-1010	Equipment of Vessels Requiring Access or Inspection Openings	31
RD-1020	Size of Manhole Openings for Class I Vessels	31
RD-1030	Size of Manhole Openings for Class II Vessels	31
RD-1040	Minimum Gasket Bearing Widths for Manhole Cover Plates	32
RD-1050	Threaded Openings in Class I Vessels	32
RD-1060	Threaded Openings in Class II Vessels	32
Article RD-11	**Mandatory Design Rules for Class II Vessels**	33
RD-1100	General	33
RD-1110	Design Basis	33
RD-1120	Design Limitations	33

Copyright ASME International (BPVC)

RD-1130	Design Acceptability	33
RD-1140	Loadings	33
RD-1150	Vessel Parts Subject to Design Analysis	33
RD-1160	Laminate Composition	33
RD-1170	Design Rules — Method A	35
RD-1180	Discontinuity Analysis — Method B	48
Article RD-12	**Laminate Stiffness Coefficients**	54
RD-1200	Laminate Stiffness Coefficients	54
RD-1210	Stiffness Coefficients for Design by Method B Rules	54
RD-1220	Nomenclature	54
RD-1230	Lamina Reduced Stiffness	56
RD-1240	Stiffness Coefficients for the Laminate	57
RD-1250	Procedure for Calculating the Stiffness Coefficients	57
Part RF	**Fabrication Requirements**	59
Article RF-1	**General Requirements**	59
RF-100	Scope	59
RF-110	Procedure Specifications	59
Article RF-2	**Special Fabrication Requirements for Bag-Molding Process (for Class I Vessels Only)**	60
RF-200	Fiber Content	60
RF-210	Form of Fiber Reinforcement	60
RF-220	Molds	61
RF-230	Liners	61
RF-240	Openings in Vessels	61
RF-250	Molded-In Fittings	61
Article RF-3	**Special Fabrication Requirements for Centrifugal-Casting Process (for Class I Vessels Only)**	62
RF-300	Fiber Content	62
RF-310	Form of Reinforcement	62
RF-320	Mandrels	62
RF-330	Liners	62
RF-340	Openings in Vessels	62
Article RF-4	**Special Fabrication Requirements for Filament-Winding Process (Classes I and II)**	63
RF-400	Fiber Content	63
RF-410	Form of Reinforcement	63
RF-420	Mandrels	63
RF-430	Liners	64
RF-440	Openings in Vessels	64
Article RF-5	**Special Fabrication Requirements for Contact-Molding Process (Classes I and II)**	65
RF-500	Fiber Content	65
RF-510	Form of Fiber Reinforcement	65
RF-520	Molds	65
RF-530	Liners	65
RF-540	Openings in Vessels	66

Copyright ASME International (BPVC)

Article RF-6	**Special Fabrication Requirements for Matched Molded Heads (Used for Closures for Centrifugally Cast Vessels — for Class I Vessels Only)**	67
RF-600	Content	67
RF-610	Form of Fiber Reinforcement	67
RF-620	Molds	68
RF-630	Openings in Heads	68
Article RF-7	**Special Fabrication Requirements for Joining Components**	69
RF-700	Procedure Specifications and Qualifications	69
Part RQ	**Qualification Requirements**	70
Article RQ-1	**Scope**	70
RQ-100	Responsibility for Qualification	70
RQ-110	Maintenance of Procedure Specification and Qualification Records	70
RQ-120	Procedure Specification Qualification Forms	70
RQ-130	Means to Be Used in Qualifying Class I Designs and Fabricating Procedures	71
RQ-140	Means for Qualifying Class II Vessel Design and Fabrication	71
Article RQ-2	**Special Requirements for Bag-Molding Procedure Qualification (Class I Vessels)**	73
RQ-200	Essential Variables	73
Article RQ-3	**Special Requirements for Centrifugal-Casting Procedure Qualification (Class I Vessels)**	74
RQ-300	Essential Variables	74
Article RQ-4	**Special Requirements for Filament-Winding Procedure Qualification (Class I Vessels)**	75
RQ-400	Essential Variables	75
Article RQ-5	**Special Requirements for Contact-Molding Procedure Qualification (Class I Vessels)**	76
RQ-500	Essential Variables	76
Article RQ-6	**Special Requirements for Class II Vessels**	77
RQ-600	Essential Design Variables	77
Part RR	**Pressure Relief Devices**	78
Article RR-1	**General Requirements**	78
RR-100	Protection Against Overpressure	78
RR-110	Types of Overpressure Protection	78
RR-120	Set Pressure	78
RR-130	Permissible Overpressures	78
Article RR-2	**Provisions in Vessels for Installation of Pressure Relief Devices**	79
RR-200	Number, Size, and Location of Connections	79
RR-210	Stop Valves Between the Vessel and Pressure Relief Device	79
RR-220	Discharge Lines From Pressure Relief Devices	79
Part RT	**Rules Governing Testing**	80
Article RT-1	**Testing Requirements**	80
RT-100	Scope	80
RT-110	Fabricator's Responsibility	80
RT-120	Inspector's Duties	80
Article RT-2	**Design and Procedure Qualification Test Requirements for Class I Vessels**	81
RT-200	General	81

Copyright ASME International (BPVC)

RT-210	Qualification Checks and Examinations	81
RT-220	Qualification Tests	82
Article RT-3	**Quality Control Test and Examination Requirements for Class I Vessels**	85
RT-300	General	85
RT-310	Frequency of Cyclic Pressure and Qualification Pressure Tests	85
RT-320	Frequency of Determination of Weight of Resin and Fiber	85
RT-330	Frequency of Volumetric Expansion Tests	85
RT-340	Frequency of Thickness Checks	85
Article RT-4	**Production Test Requirements for Class I Vessels**	86
RT-400	General	86
RT-410	Visual Examination	86
RT-420	Thickness Check	87
RT-430	Vessel Weight	87
RT-440	Barcol Hardness Test	87
RT-450	Hydrostatic Leakage Test	87
RT-460	Conditions Under Which Pneumatic Leakage Test May Be Used	88
Article RT-5	**Hydrostatic Testing Procedures and Equipment for Class I and Class II Vessels**	89
RT-500	Provision of Vents at High Points	89
RT-510	Test gages	89
RT-520	Calibration of Acoustic Emission Equipment	89
Article RT-6	**Acceptance Test Procedure for Class II Vessels**	90
RT-600	General	90
RT-610	Acceptance Checks and Examinations	90
RT-620	Acceptance Tests	90
RT-630	Penetrant Examination	91
Article RT-7	**Determination of Mechanical Properties of Lamina for Use With Class II Vessels**	92
RT-700	Required Mechanical Properties of the Lamina	92
Article RT-8	**Test Methods for Determining Damage-Based Design Criterion**	94
RT-800	Scope	94
RT-810	Referenced documents	94
RT-820	Apparatus, Loading Procedure, and Data Analysis	94
Part RI	**Inspection Requirements**	95
Article RI-1	**General**	95
RI-100	Scope	95
RI-110	Qualification of Inspectors	95
RI-120	Access for Inspector	95
RI-130	Inspector's Duties	95
RI-140	Inspection of Material	96
RI-150	Inspection During Fabrication	96
RI-160	Alternative Inspection for Multiple, Duplicate Fabrication	96
Article RI-2	**Special Inspection Requirements for Bag Molding (Class I Vessels)**	97
RI-200	Check of Bag-Molding Procedure Specification Qualification	97
RI-210	Visual Inspection	97
Article RI-3	**Special Inspection Requirements for Centrifugal Casting (Class I Vessels)**	98

Copyright ASME International (BPVC)

RI-300	Check of Centrifugal-Casting Procedure Specification Qualification	98
RI-310	Visual Inspection	98
Article RI-4	**Special Inspection Requirements for Filament Winding**	99
RI-400	Check of Filament-Winding Procedure Specification Qualification	99
RI-410	Visual Inspection	99
Article RI-5	**Special Inspection Requirements for Contact Molding**	100
RI-500	Check of Contact-Molding Procedure Specification Qualification	100
RI-510	Visual Inspection	100
Part RS	**Marking, Stamping, and Reports**	101
Article RS-1	**Contents, Methods, and Means of Marking**	101
RS-100	Required Marking for Vessels	101
RS-110	Application of Stamp to Vessel	101
RS-120	Part Marking	102
RS-130	Nameplate	102
Article RS-2	**Use of Certification Mark Stamp**	103
RS-200	Certification Mark Stamp Bearing Official Mark	103
Article RS-3	**Report Forms**	104
RS-300	Fabricator's Data Reports	104
Mandatory Appendix 1	**Quality Control System**	105
1-100	General	105
1-110	Outline of Some of the Features to Be Included in the Quality Control System	105
Mandatory Appendix 2	**Capacity Conversions for Safety Valves**	107
2-100	Requirements for Capacity Conversions	107
Mandatory Appendix 4	**Glossary of Terms Related to Fiber-Reinforced Plastics**	110
Mandatory Appendix 5	**Specific Gravity of Liquid Resins**	119
5-100	Introduction	119
5-200	Apparatus	119
5-300	Safety Precautions	119
5-400	Procedure	119
5-500	Calculations	119
5-600	Report	119
Mandatory Appendix 6	**Structural Laminate Visual Acceptance Criteria**	120
6-100	Structural Laminate Visual Acceptance Criteria	120
Mandatory Appendix 7	**Standard Units for Use in Equations**	125
Mandatory Appendix 8	**Class III Vessels With Liners for High Pressure Fluids in Stationary Service**	126
8-100	Scope	126
8-200	General	126
8-300	Materials	127
8-400	Design	129
8-500	Fabrication	129
8-600	Examination	130
Mandatory Appendix 9	**Establishing Governing Code Editions, Addenda, and Cases for FRP Pressure Vessels**	149
9-100	General	149
9-200	Design	149

Copyright ASME International (BPVC)

9-300	Materials	149
9-400	Fabrication	149
9-500	Examination	149
9-600	Inspection	150
9-700	Testing	150
9-800	Overpressure Protection	150
9-900	Field Assembly	150
9-1000	Certification	150
Mandatory Appendix 10	**Laminates With Load-Sharing Metallic Shells for High Pressure Service**	151
10-100	Scope	151
10-200	General Requirements	151
10-300	Materials	152
10-400	Fabrication	155
10-500	Examination and Testing Requirements	157
10-600	Laminate Procedure Qualification	161
10-700	Inspector's Duties	163
Nonmandatory Appendix AA	**Suggested Methods of Preliminary Design for Class I Vessels**	165
Article AA-1	**General**	165
AA-100	Scope	165
Article AA-2	**Shells of Revolution Under Internal Pressure**	166
AA-200	General	166
AA-210	Die-Formed Heads, Pressure on Concave Side	167
Article AA-3	**Shells of Revolution Under External Pressure**	168
AA-300	General Requirements	168
Article AA-4	**Reinforcement of Openings in Vessels**	169
AA-400	General Requirements	169
AA-410	Reinforcement for Internal Pressure	169
Article AA-5	**Attachments and Supports**	170
AA-500	General	170
AA-510	Attachments	170
AA-520	Supports	170
Nonmandatory Appendix AB	**Installation and Operation**	173
AB-100	Introduction	173
Nonmandatory Appendix AC	**Discontinuity Stresses for Class II, Method B Vessels**	175
Article AC-1	**Examples of Discontinuity Stresses**	175
AC-100	Example Illustrating the Application of Discontinuity Analysis	175
Article AC-2	**Examples of Stress Analysis of Cylindrical Shells**	181
AC-200	Sign Convention and Nomenclature	181
AC-210	Principal Stresses and Stress Intensities Due to Internal Pressure	182
AC-220	Bending Analysis for Uniformly Distributed Edge Loads	182
AC-230	Displacements, Bending Moments, and Shearing Forces in Terms of Conditions at Reference Edge, $x = 0$	182
AC-240	Principal Stresses Due to Bending	183
Article AC-3	**Examples of Stress Analysis of Spherical Shells**	184
AC-300	Scope	184

Copyright ASME International (BPVC)

AC-310	Nomenclature and Sign Convention	184
AC-320	Principal Stresses and Stress Intensities Resulting From Internal or External Pressure	185
AC-330	Bending Analysis for Uniformly Distributed Edge Loads	186
AC-340	Alternate Bending Analysis of a Hemispherical Shell Subjected to Uniformly Distributed Edge Loads	187
Article AC-4	**Examples of Stress Analysis of Flat Circular Heads**	188
AC-400	Scope	188
AC-410	Nomenclature and Sign Convention	188
AC-420	Pressure and Edge Loads on Circular Flat Plates	188
AC-430	Flat Plate Pressure Vessel Heads	189
AC-440	Geometry Constants	190
AC-450	Stress Intensities in a Flat Plate	191
Nonmandatory Appendix AD	**Laminate Theory**	192
AD-100	Scope	192
AD-200	Standard Notation	192
AD-300	Basic Assumptions	193
AD-310	Nomenclature	193
AD-400	Lamina (Ply) Properties	193
AD-500	Illustrative Example	193
AD-510	Strain-Space Failure Envelopes	202
Nonmandatory Appendix AF	**Examples for Design Rules for Class II Vessels**	207
AF-100	General	207
AF-200	Cylindrical Shells Under Uniform Internal Pressure (See RD-1171.1)	207
AF-210	Spherical Shells Under Internal Pressure (See RD-1171.2)	207
AF-300	Cylindrical Shells Under External Pressure (See RD-1172.1)	207
AF-310	Spherical Shells Under Uniform External Pressure (See RD-1172.2)	208
AF-400	Thickness of Heads Under Internal Pressure (See RD-1173.1)	208
AF-410	Thickness of Heads Under External Pressure (See RD-1173.2)	208
AF-420	Reinforcement of Openings and Nozzle Attachments (See RD-1174.2)	208
AF-500	Head-to-Shell Joint Overlay Subject to Internal Pressure (See RD-1175.2)	209
Nonmandatory Appendix AG	**Guide to Information Appearing on Certificate of Authorization (See Figure AG-1)**	210
Nonmandatory Appendix AH	**Guidance for the Use of U.S. Customary and SI Units in the ASME Boiler and Pressure Vessel Code**	212
AH-100	Use of Units in Equations	212
AH-200	Guidelines Used to Develop SI Equivalents	212
AH-300	Soft Conversion Factors	214
Nonmandatory Appendix AI	**Rigorous NASA SP-8007 Solution for Lateral and Longitudinal Pressure**	215
AI-100		215
AI-200	Buckling Example	216
Nonmandatory Appendix AJ	**Forms Required by Section X**	219
	Latest Revision and Year Date of Forms Referenced in This Code	
Nonmandatory Appendix AK	**Lamina Elastic Constants — Micromechanics**	255
AK-100	Lamina Elastic Constants	255
AK-200	Nomenclature	255

Copyright ASME International (BPVC)

AK-300	Preliminary Calculations	255
AK-400	Micromechanics Equations for a Unidirectional Layer	256
AK-500	Micromechanics of a Randomly Distributed, Fiber-Reinforced Lamina	258
Nonmandatory Appendix AL	**Fire and Excessive Heat Exposure Guidance**	264
AL-100	General	264
AL-200	Suggested Methods to Mitigate Fire Exposure	264

Figures

RD-620.3	Flange Tolerances	23
RD-620.4(a)	Plate-Type Gussets	24
RD-620.4(b)	Typical Cone-Type Gusset	24
RD-620.5	Flush Nozzle Installation	25
RD-620.6	Penetrating Nozzle Installation	26
RD-700.1	Acceptable Types of Flat Heads for Class I Vessels	27
RD-1120.1	Design Limitations for Class II Vessels	34
RD-1174.2	Dimensions of Reinforcing Pad and Nozzle Overlays	38
RD-1174.3	Stress Concentration Factors for a Circular Hole in a Pressurized Cylindrical Shell	39
RD-1175.2	Head/Shell or Shell/Shell Overlay Dimensions	41
RD-1176.1	Design of Full-Face Nozzle Flanges	43
RD-1176.2	Values of V (Integral Flange Factor)	45
RD-1176.3	Values of F (Integral Flange Factor)	46
RD-1176.4	Values of f (Hub Stress Correction Factor)	47
RD-1176.5	Values of T, Z, Y, and U (Terms Involving K)	48
RD-1220.1	Moment Resultants	55
RD-1220.2	In-Plane Force Resultants	55
RD-1220.3	Coordinate Systems	56
RD-1250.1	Geometry of an N-Layered Laminate	58
RF-210.1	Fiber Side Wall Lay-Up for Bag Molding	60
RF-210.2	Head or End Preform for Cylindrical Vessel	60
RF-610.1	Fiber Preform and Insert for Head for Centrifugally Cast Vessel	67
RF-610.2	Fiber Head or End Preformed Inserts for Centrifugally Cast Vessel Heads	68
RS-100.1	Official Certification Mark to Denote the American Society of Mechanical Engineers' Standard	101
RS-132.1	Form of Stamping and Marking	102
2-100.1	Constant C for Gas or Vapor Related to Ratio of Specific Heats ($k = c_p/c_v$)	108
2-100.1M	Constant C for Gas or Vapor Related to Ratio of Specific Heats ($k = c_p/c_v$)	108
8-700.5.11.1-1	Pendulum Impact Test	141
10-201-1	General Arrangement	151
10-201-2	Laminate Termination	152
10-201-3	Laminate Step	152
AA-522.1	Saddle-Type Supports	171
AA-523.1	Ring or Flange Support	171
AA-524.1	Metal Attachment in Vessel End	172
AA-524.2	Metal Attachments in Thickened Ends	172
AC-100.1		175

Copyright ASME International (BPVC)

AC-100.2 176
AC-100.3 176
AC-100.4 177
AC-100.5 177
AC-200 Symbols and Sign Convention 181
AC-310 185
AC-410 189
AC-421 189
AC-422 189
AC-430 189
AC-431 190
AD-201 192
AD-202 Reference Coordinates 193
AD-500 194
AD-503 198
AD-505 198
AD-510 Failure Envelopes — Example Laminate in Strain Space 206
AG-1 Sample Certificate of Authorization 211
Q-115.1 Schematic Views of Permissible Joint Designs for Adhesive-Bonded Cylinder Joints for Tensile Tests (Revision A — 1998) 229

Tables

RM-120.1 Resin Systems Required Certification by Resin Manufacturer 9
RM-120.2 Resin Systems Required Test by Vessel Fabricator 9
RD-620.1 Flange and Nozzle Dimensions for Hand Lay-Up and Pressure-Molded Flanges 21
RD-1173.2 Values of Spherical Radius Factor K_o for Ellipsoidal Heads With Pressure on Convex Side 37
RT-620.1 Evaluation Criteria 91
2-100.1 Molecular Weights of Gases and Vapors 109
6-100.1 Structural Laminate Visual Acceptance Criteria for Class I Pressure Vessels 121
6-100.2 Structural Laminate Visual Acceptance Criteria for Class II Pressure Vessels 123
7-100.1 Standard Units for Use in Equations 125
8-300.4.1-1 Resin Systems: Required Certifications and Tests 128
8-600.2.1-1 Visual Acceptance Criteria for FRP Laminate (U.S. Customary Units) 131
8-600.2.1-2 Visual Acceptance Criteria for FRP Laminate (SI Units) 132
8-700.2.1-1 Qualification Tests 137
8-900.3-1 Guide for Completing Fabricator's Data Report CPV-1 144
10-305.1-1 Resin Supplier Certifications 153
10-305.1-2 Tests by Laminate Manufacturer 154
10-307-1 Pre-Preg Supplier Certifications 154
10-307-2 Pre-Preg Systems Tests by CRPV Manufacturer 155
10-503-1 Visual Acceptance Criteria for FRP Laminate (U.S. Customary Units) 158
10-503-1M Visual Acceptance Criteria for FRP Laminate (SI Units) 160
10-503-2 Acoustic Emission Evaluation Criteria 161
AC-440.1 191
AD-500 Assumed Lamina Elastic and Strength Properties 194

Copyright ASME International (BPVC)

AD-501	Transformed Modulus Components, 10^6 psi	196
AD-506	Matrices for Illustrative Example	199
AD-507.2	Off-Axis Mechanical Strain	200
AD-507.3	On-Axis Mechanical Strain	201
AD-510	Strain-Space Envelope Coordinates	204
AG-1	Guide to Information Appearing on Certificate of Authorization (See Figure AG-1)	210
AJ-1	Latest Revision and Year Date of Forms Referenced in This Code	219
AJ-2	Guide for Completing Form RP-1 (Revision E — 2017)	243
AJ-3	Guide for Completing Form RP-2 (Revision C — 2013)	246
AJ-4	Guide for Completing Form RP-3 (Revision F — 2017)	249
AJ-5	Guide for Completing Form RP-4 (Revision C — 2013)	252
AJ-6	Guide for Completing Form RP-5 (Revision C — 2017)	254

Forms

CPV-1	Fabricator's Data Report for Composite Reinforced Pressure Vessels (Class III)	142
CPV-2	Recommended Form for Qualifying the Laminate Design and the Laminate Procedure Specification Used in the Fabrication of Composite Reinforced Pressure Vessels (Class III)	146
Q-106	Recommended Form for Qualifying the Vessel Design and the Procedure Specification Used in Fabricating Bag-Molded and Centrifugally Cast Fiber-Reinforced Plastic Pressure Vessels (Class I)	220
Q-107	Recommended Form for Qualifying the Vessel Design and the Procedure Specification Used in Fabricating Filament-Wound Fiber-Reinforced Plastic Pressure Vessels (Class I)	222
Q-108	Recommended Form for Qualifying the Vessel Design and the Procedure Specification Used in Fabricating Contact-Molded, Fiber-Reinforced Plastic Pressure Vessels (Class I)	224
Q-115	Recommended Form for Qualifying the Design and the Procedure Specification Used in Adhesive Bonding of Parts of Fiber-Reinforced Plastic Pressure Vessels (Class I)	227
Q-120	Procedure Specification for Class II Vessels	231
RP-1	Fabricator's Data Report for Fiber-Reinforced Plastic Pressure Vessels (Class I)	241
RP-2	Fabricator's Partial Data Report (Class I)	244
RP-3	Fabricator's Data Report for Class II Vessels	247
RP-4	Fabricator's Partial Data Report for Class II Vessels	250
RP-5	Fabricator's Data Report Supplementary Sheet	253

Endnotes 266

Copyright ASME International (BPVC)

INTENTIONALLY LEFT BLANK

Copyright ASME International (BPVC)

LIST OF SECTIONS

(19)

SECTIONS

I Rules for Construction of Power Boilers

II Materials
- Part A — Ferrous Material Specifications
- Part B — Nonferrous Material Specifications
- Part C — Specifications for Welding Rods, Electrodes, and Filler Metals
- Part D — Properties (Customary)
- Part D — Properties (Metric)

III Rules for Construction of Nuclear Facility Components
- Subsection NCA — General Requirements for Division 1 and Division 2
- Appendices
- Division 1
  - Subsection NB — Class 1 Components
  - Subsection NC — Class 2 Components
  - Subsection ND — Class 3 Components
  - Subsection NE — Class MC Components
  - Subsection NF — Supports
  - Subsection NG — Core Support Structures
- Division 2 — Code for Concrete Containments
- Division 3 — Containment Systems for Transportation and Storage of Spent Nuclear Fuel and High-Level Radioactive Material
- Division 5 — High Temperature Reactors

IV Rules for Construction of Heating Boilers

V Nondestructive Examination

VI Recommended Rules for the Care and Operation of Heating Boilers

VII Recommended Guidelines for the Care of Power Boilers

VIII Rules for Construction of Pressure Vessels
- Division 1
- Division 2 — Alternative Rules
- Division 3 — Alternative Rules for Construction of High Pressure Vessels

IX Welding, Brazing, and Fusing Qualifications

X Fiber-Reinforced Plastic Pressure Vessels

XI Rules for Inservice Inspection of Nuclear Power Plant Components
- Division 1 — Rules for Inspection and Testing of Components of Light-Water-Cooled Plants
- Division 2 — Requirements for Reliability and Integrity Management (RIM) Programs for Nuclear Power Plants

XII Rules for Construction and Continued Service of Transport Tanks

--`,```,,,,,````,`,``,,`,,`,`-`-`,,`,,`,`,,`---

Copyright ASME International (BPVC)

INTERPRETATIONS

Interpretations are issued in real time in ASME's Interpretations Database at http://go.asme.org/Interpretations. Historical BPVC interpretations may also be found in the Database.

CODE CASES

The Boiler and Pressure Vessel Code committees meet regularly to consider proposed additions and revisions to the Code and to formulate Cases to clarify the intent of existing requirements or provide, when the need is urgent, rules for materials or constructions not covered by existing Code rules. Those Cases that have been adopted will appear in the appropriate 2019 Code Cases book: "Boilers and Pressure Vessels" or "Nuclear Components." Each Code Cases book is updated with seven Supplements. Supplements will be sent or made available automatically to the purchasers of the Code Cases books up to the publication of the 2021 Code. Code Case users can check the current status of any Code Case at http://go.asme.org/BPVCCDatabase. Code Case users can also view an index of the complete list of Boiler and Pressure Vessel Code Cases and Nuclear Code Cases at http://go.asme.org/BPVCC.

Copyright ASME International (BPVC)

FOREWORD*

(19)

In 1911, The American Society of Mechanical Engineers established the Boiler and Pressure Vessel Committee to formulate standard rules for the construction of steam boilers and other pressure vessels. In 2009, the Boiler and Pressure Vessel Committee was superseded by the following committees:

(a) Committee on Power Boilers (I)

(b) Committee on Materials (II)

(c) Committee on Construction of Nuclear Facility Components (III)

(d) Committee on Heating Boilers (IV)

(e) Committee on Nondestructive Examination (V)

(f) Committee on Pressure Vessels (VIII)

(g) Committee on Welding, Brazing, and Fusing (IX)

(h) Committee on Fiber-Reinforced Plastic Pressure Vessels (X)

(i) Committee on Nuclear Inservice Inspection (XI)

(j) Committee on Transport Tanks (XII)

(k) Technical Oversight Management Committee (TOMC)

Where reference is made to "the Committee" in this Foreword, each of these committees is included individually and collectively.

The Committee's function is to establish rules of safety relating only to pressure integrity, which govern the construction** of boilers, pressure vessels, transport tanks, and nuclear components, and the inservice inspection of nuclear components and transport tanks. The Committee also interprets these rules when questions arise regarding their intent. The technical consistency of the Sections of the Code and coordination of standards development activities of the Committees is supported and guided by the Technical Oversight Management Committee. This Code does not address other safety issues relating to the construction of boilers, pressure vessels, transport tanks, or nuclear components, or the inservice inspection of nuclear components or transport tanks. Users of the Code should refer to the pertinent codes, standards, laws, regulations, or other relevant documents for safety issues other than those relating to pressure integrity. Except for Sections XI and XII, and with a few other exceptions, the rules do not, of practical necessity, reflect the likelihood and consequences of deterioration in service related to specific service fluids or external operating environments. In formulating the rules, the Committee considers the needs of users, manufacturers, and inspectors of pressure vessels. The objective of the rules is to afford reasonably certain protection of life and property, and to provide a margin for deterioration in service to give a reasonably long, safe period of usefulness. Advancements in design and materials and evidence of experience have been recognized.

This Code contains mandatory requirements, specific prohibitions, and nonmandatory guidance for construction activities and inservice inspection and testing activities. The Code does not address all aspects of these activities and those aspects that are not specifically addressed should not be considered prohibited. The Code is not a handbook and cannot replace education, experience, and the use of engineering judgment. The phrase *engineering judgment* refers to technical judgments made by knowledgeable engineers experienced in the application of the Code. Engineering judgments must be consistent with Code philosophy, and such judgments must never be used to overrule mandatory requirements or specific prohibitions of the Code.

The Committee recognizes that tools and techniques used for design and analysis change as technology progresses and expects engineers to use good judgment in the application of these tools. The designer is responsible for complying with Code rules and demonstrating compliance with Code equations when such equations are mandatory. The Code neither requires nor prohibits the use of computers for the design or analysis of components constructed to the

*The information contained in this Foreword is not part of this American National Standard (ANS) and has not been processed in accordance with ANSI's requirements for an ANS. Therefore, this Foreword may contain material that has not been subjected to public review or a consensus process. In addition, it does not contain requirements necessary for conformance to the Code.

***Construction*, as used in this Foreword, is an all-inclusive term comprising materials, design, fabrication, examination, inspection, testing, certification, and pressure relief.

Copyright ASME International (BPVC)

requirements of the Code. However, designers and engineers using computer programs for design or analysis are cautioned that they are responsible for all technical assumptions inherent in the programs they use and the application of these programs to their design.

The rules established by the Committee are not to be interpreted as approving, recommending, or endorsing any proprietary or specific design, or as limiting in any way the manufacturer's freedom to choose any method of design or any form of construction that conforms to the Code rules.

The Committee meets regularly to consider revisions of the rules, new rules as dictated by technological development, Code Cases, and requests for interpretations. Only the Committee has the authority to provide official interpretations of this Code. Requests for revisions, new rules, Code Cases, or interpretations shall be addressed to the Secretary in writing and shall give full particulars in order to receive consideration and action (see Submittal of Technical Inquiries to the Boiler and Pressure Vessel Standards Committees). Proposed revisions to the Code resulting from inquiries will be presented to the Committee for appropriate action. The action of the Committee becomes effective only after confirmation by ballot of the Committee and approval by ASME. Proposed revisions to the Code approved by the Committee are submitted to the American National Standards Institute (ANSI) and published at http://go.asme.org/BPVCPublicReview to invite comments from all interested persons. After public review and final approval by ASME, revisions are published at regular intervals in Editions of the Code.

The Committee does not rule on whether a component shall or shall not be constructed to the provisions of the Code. The scope of each Section has been established to identify the components and parameters considered by the Committee in formulating the Code rules.

Questions or issues regarding compliance of a specific component with the Code rules are to be directed to the ASME Certificate Holder (Manufacturer). Inquiries concerning the interpretation of the Code are to be directed to the Committee. ASME is to be notified should questions arise concerning improper use of the ASME Single Certification Mark.

When required by context in this Section, the singular shall be interpreted as the plural, and vice versa, and the feminine, masculine, or neuter gender shall be treated as such other gender as appropriate.

Copyright ASME International (BPVC)

STATEMENT OF POLICY ON THE USE OF THE ASME SINGLE CERTIFICATION MARK AND CODE AUTHORIZATION IN ADVERTISING (19)

ASME has established procedures to authorize qualified organizations to perform various activities in accordance with the requirements of the ASME Boiler and Pressure Vessel Code. It is the aim of the Society to provide recognition of organizations so authorized. An organization holding authorization to perform various activities in accordance with the requirements of the Code may state this capability in its advertising literature.

Organizations that are authorized to use the ASME Single Certification Mark for marking items or constructions that have been constructed and inspected in compliance with the ASME Boiler and Pressure Vessel Code are issued Certificates of Authorization. It is the aim of the Society to maintain the standing of the ASME Single Certification Mark for the benefit of the users, the enforcement jurisdictions, and the holders of the ASME Single Certification Mark who comply with all requirements.

Based on these objectives, the following policy has been established on the usage in advertising of facsimiles of the ASME Single Certification Mark, Certificates of Authorization, and reference to Code construction. The American Society of Mechanical Engineers does not "approve," "certify," "rate," or "endorse" any item, construction, or activity and there shall be no statements or implications that might so indicate. An organization holding the ASME Single Certification Mark and/or a Certificate of Authorization may state in advertising literature that items, constructions, or activities "are built (produced or performed) or activities conducted in accordance with the requirements of the ASME Boiler and Pressure Vessel Code," or "meet the requirements of the ASME Boiler and Pressure Vessel Code." An ASME corporate logo shall not be used by any organization other than ASME.

The ASME Single Certification Mark shall be used only for stamping and nameplates as specifically provided in the Code. However, facsimiles may be used for the purpose of fostering the use of such construction. Such usage may be by an association or a society, or by a holder of the ASME Single Certification Mark who may also use the facsimile in advertising to show that clearly specified items will carry the ASME Single Certification Mark.

STATEMENT OF POLICY ON THE USE OF ASME MARKING TO IDENTIFY MANUFACTURED ITEMS (19)

The ASME Boiler and Pressure Vessel Code provides rules for the construction of boilers, pressure vessels, and nuclear components. This includes requirements for materials, design, fabrication, examination, inspection, and stamping. Items constructed in accordance with all of the applicable rules of the Code are identified with the ASME Single Certification Mark described in the governing Section of the Code.

Markings such as "ASME," "ASME Standard," or any other marking including "ASME" or the ASME Single Certification Mark shall not be used on any item that is not constructed in accordance with all of the applicable requirements of the Code.

Items shall not be described on ASME Data Report Forms nor on similar forms referring to ASME that tend to imply that all Code requirements have been met when, in fact, they have not been. Data Report Forms covering items not fully complying with ASME requirements should not refer to ASME or they should clearly identify all exceptions to the ASME requirements.

Copyright ASME International (BPVC)

(19) # SUBMITTAL OF TECHNICAL INQUIRIES TO THE BOILER AND PRESSURE VESSEL STANDARDS COMMITTEES

1 INTRODUCTION

(a) The following information provides guidance to Code users for submitting technical inquiries to the applicable Boiler and Pressure Vessel (BPV) Standards Committee (hereinafter referred to as the Committee). See the guidelines on approval of new materials under the ASME Boiler and Pressure Vessel Code in Section II, Part D for requirements for requests that involve adding new materials to the Code. See the guidelines on approval of new welding and brazing materials in Section II, Part C for requirements for requests that involve adding new welding and brazing materials ("consumables") to the Code.

Technical inquiries can include requests for revisions or additions to the Code requirements, requests for Code Cases, or requests for Code Interpretations, as described below:

(1) Code Revisions. Code revisions are considered to accommodate technological developments, to address administrative requirements, to incorporate Code Cases, or to clarify Code intent.

(2) Code Cases. Code Cases represent alternatives or additions to existing Code requirements. Code Cases are written as a Question and Reply, and are usually intended to be incorporated into the Code at a later date. When used, Code Cases prescribe mandatory requirements in the same sense as the text of the Code. However, users are cautioned that not all regulators, jurisdictions, or Owners automatically accept Code Cases. The most common applications for Code Cases are as follows:

(-a) to permit early implementation of an approved Code revision based on an urgent need

(-b) to permit use of a new material for Code construction

(-c) to gain experience with new materials or alternative requirements prior to incorporation directly into the Code

(3) Code Interpretations

(-a) Code Interpretations provide clarification of the meaning of existing requirements in the Code and are presented in Inquiry and Reply format. Interpretations do not introduce new requirements.

(-b) If existing Code text does not fully convey the meaning that was intended, or conveys conflicting requirements, and revision of the requirements is required to support the Interpretation, an Intent Interpretation will be issued in parallel with a revision to the Code.

(b) Code requirements, Code Cases, and Code Interpretations established by the Committee are not to be considered as approving, recommending, certifying, or endorsing any proprietary or specific design, or as limiting in any way the freedom of manufacturers, constructors, or Owners to choose any method of design or any form of construction that conforms to the Code requirements.

(c) Inquiries that do not comply with the following guidance or that do not provide sufficient information for the Committee's full understanding may result in the request being returned to the Inquirer with no action.

2 INQUIRY FORMAT

Submittals to the Committee should include the following information:

(a) Purpose. Specify one of the following:

(1) request for revision of present Code requirements

(2) request for new or additional Code requirements

(3) request for Code Case

(4) request for Code Interpretation

(b) Background. The Inquirer should provide the information needed for the Committee's understanding of the Inquiry, being sure to include reference to the applicable Code Section, Division, Edition, Addenda (if applicable), paragraphs, figures, and tables. Preferably, the Inquirer should provide a copy of, or relevant extracts from, the specific referenced portions of the Code.

Copyright ASME International (BPVC)

(c) Presentations. The Inquirer may desire to attend or be asked to attend a meeting of the Committee to make a formal presentation or to answer questions from the Committee members with regard to the Inquiry. Attendance at a BPV Standards Committee meeting shall be at the expense of the Inquirer. The Inquirer's attendance or lack of attendance at a meeting will not be used by the Committee as a basis for acceptance or rejection of the Inquiry by the Committee. However, if the Inquirer's request is unclear, attendance by the Inquirer or a representative may be necessary for the Committee to understand the request sufficiently to be able to provide an Interpretation. If the Inquirer desires to make a presentation at a Committee meeting, the Inquirer should provide advance notice to the Committee Secretary, to ensure time will be allotted for the presentation in the meeting agenda. The Inquirer should consider the need for additional audiovisual equipment that might not otherwise be provided by the Committee. With sufficient advance notice to the Committee Secretary, such equipment may be made available.

3 CODE REVISIONS OR ADDITIONS

Requests for Code revisions or additions should include the following information:

(a) Requested Revisions or Additions. For requested revisions, the Inquirer should identify those requirements of the Code that they believe should be revised, and should submit a copy of, or relevant extracts from, the appropriate requirements as they appear in the Code, marked up with the requested revision. For requested additions to the Code, the Inquirer should provide the recommended wording and should clearly indicate where they believe the additions should be located in the Code requirements.

(b) Statement of Need. The Inquirer should provide a brief explanation of the need for the revision or addition.

(c) Background Information. The Inquirer should provide background information to support the revision or addition, including any data or changes in technology that form the basis for the request, that will allow the Committee to adequately evaluate the requested revision or addition. Sketches, tables, figures, and graphs should be submitted, as appropriate. The Inquirer should identify any pertinent portions of the Code that would be affected by the revision or addition and any portions of the Code that reference the requested revised or added paragraphs.

4 CODE CASES

Requests for Code Cases should be accompanied by a statement of need and background information similar to that described in 3(b) and 3(c), respectively, for Code revisions or additions. The urgency of the Code Case (e.g., project underway or imminent, new procedure) should be described. In addition, it is important that the request is in connection with equipment that will bear the ASME Single Certification Mark, with the exception of Section XI applications. The proposed Code Case should identify the Code Section and Division, and should be written as a Question and a Reply, in the same format as existing Code Cases. Requests for Code Cases should also indicate the applicable Code Editions and Addenda (if applicable) to which the requested Code Case applies.

5 CODE INTERPRETATIONS

(a) Requests for Code Interpretations should be accompanied by the following information:

(1) Inquiry. The Inquirer should propose a condensed and precise Inquiry, omitting superfluous background information and, when possible, composing the Inquiry in such a way that a "yes" or a "no" Reply, with brief limitations or conditions, if needed, can be provided by the Committee. The proposed question should be technically and editorially correct.

(2) Reply. The Inquirer should propose a Reply that clearly and concisely answers the proposed Inquiry question. Preferably, the Reply should be "yes" or "no," with brief limitations or conditions, if needed.

(3) Background Information. The Inquirer should provide any need or background information, such as described in 3(b) and 3(c), respectively, for Code revisions or additions, that will assist the Committee in understanding the proposed Inquiry and Reply.

If the Inquirer believes a revision of the Code requirements would be helpful to support the Interpretation, the Inquirer may propose such a revision for consideration by the Committee. In most cases, such a proposal is not necessary.

(b) Requests for Code Interpretations should be limited to an Interpretation of a particular requirement in the Code or in a Code Case. Except with regard to interpreting a specific Code requirement, the Committee is not permitted to consider consulting-type requests such as the following:

(1) a review of calculations, design drawings, welding qualifications, or descriptions of equipment or parts to determine compliance with Code requirements

--`,,```,,,,,````-`-`,,`,,`,`,,`---

Copyright ASME International (BPVC)

(2) a request for assistance in performing any Code-prescribed functions relating to, but not limited to, material selection, designs, calculations, fabrication, inspection, pressure testing, or installation

(3) a request seeking the rationale for Code requirements

6 SUBMITTALS

(a) Submittal. Requests for Code Interpretation should preferably be submitted through the online Interpretation Submittal Form. The form is accessible at http://go.asme.org/InterpretationRequest. Upon submittal of the form, the Inquirer will receive an automatic e-mail confirming receipt. If the Inquirer is unable to use the online form, the Inquirer may mail the request to the following address:

Secretary
ASME Boiler and Pressure Vessel Committee
Two Park Avenue
New York, NY 10016-5990

All other Inquiries should be mailed to the Secretary of the BPV Committee at the address above. Inquiries are unlikely to receive a response if they are not written in clear, legible English. They must also include the name of the Inquirer and the company they represent or are employed by, if applicable, and the Inquirer's address, telephone number, fax number, and e-mail address, if available.

(b) Response. The Secretary of the appropriate Committee will provide a written response, via letter or e-mail, as appropriate, to the Inquirer, upon completion of the requested action by the Committee. Inquirers may track the status of their Interpretation Request at http://go.asme.org/Interpretations.

Copyright ASME International (BPVC)

PERSONNEL
ASME Boiler and Pressure Vessel Standards Committees, Subgroups, and Working Groups

January 1, 2019

TECHNICAL OVERSIGHT MANAGEMENT COMMITTEE (TOMC)

T. P. Pastor, *Chair*
S. C. Roberts, *Vice Chair*
S. J. Rossi, *Staff Secretary*
R. W. Barnes
R. J. Basile
T. L. Bedeaux
D. L. Berger
D. A. Bowers
J. Cameron
A. Chaudouet
D. B. DeMichael
R. P. Deubler
P. D. Edwards
J. G. Feldstein
N. A. Finney
J. A. Hall
T. E. Hansen
G. W. Hembree
J. F. Henry
R. S. Hill III
W. M. Lundy
R. E. McLaughlin
G. C. Park
M. D. Rana
R. F. Reedy, Sr.
F. J. Schaaf, Jr.
G. Scribner
B. F. Shelley
W. J. Sperko
D. Srnic
R. W. Swayne
J. E. Batey, *Contributing Member*

HONORARY MEMBERS (MAIN COMMITTEE)

F. P. Barton
T. M. Cullen
G. E. Feigel
O. F. Hedden
M. H. Jawad
A. J. Justin
W. G. Knecht
J. LeCoff
T. G. McCarty
G. C. Millman
R. A. Moen
R. F. Reedy, Sr.

Subgroup on Research and Development (TOMC)

R. W. Barnes, *Chair*
S. J. Rossi, *Staff Secretary*
D. A. Canonico
J. F. Henry
R. S. Hill III
W. Hoffelner
B. Hrubala
T. P. Pastor
S. C. Roberts
D. Andrei, *Contributing Member*

ADMINISTRATIVE COMMITTEE

T. P. Pastor, *Chair*
S. C. Roberts, *Vice Chair*
S. J. Rossi, *Staff Secretary*
R. J. Basile
D. A. Bowers
J. Cameron
D. B. DeMichael
J. A. Hall
G. W. Hembree
R. S. Hill III
R. E. McLaughlin
M. D. Rana
B. F. Shelley
R. R. Stevenson
R. W. Swayne

Subgroup on Strategic Initiatives (TOMC)

S. C. Roberts, *Chair*
S. J. Rossi, *Staff Secretary*
R. W. Barnes
T. L. Bedeaux
G. W. Hembree
J. F. Henry
R. S. Hill III
B. Hrubala
M. H. Jawad
R. E. McLaughlin
G. C. Park
T. P. Pastor
R. F. Reedy, Sr.

Special Working Group on High Temperature Technology (TOMC)

D. Dewees, *Chair*
F. W. Brust
T. D. Burchell
P. R. Donavin
B. F. Hantz
J. F. Henry
R. I. Jetter
P. Smith

MARINE CONFERENCE GROUP

H. N. Patel, *Chair*
S. J. Rossi, *Staff Secretary*
J. G. Hungerbuhler, Jr.
G. Nair
N. Prokopuk
J. D. Reynolds

Copyright ASME International (BPVC)

CONFERENCE COMMITTEE

C. B. Cantrell — Nebraska, *Chair*
J. T. Amato — Minnesota, *Vice Chair*
D. A. Douin — Ohio, *Secretary*
M. J. Adams — Ontario, Canada
W. Anderson — Mississippi
R. Becker — Colorado
R. J. Brockman — Missouri
R. J. Bunte — Iowa
J. H. Burpee — Maine
M. J. Byrum — Alabama
S. Chapman — Tennessee
D. C. Cook — California
B. J. Crawford — Georgia
E. L. Creaser — New Brunswick, Canada
J. J. Dacanay — Hawaii
C. Dautrich — North Carolina
R. DeLury — Manitoba, Canada
D. Eastman — Newfoundland and Labrador, Canada
D. A. Ehler — Nova Scotia, Canada
J. J. Esch — Delaware
T. J. Granneman II — Oklahoma
E. G. Hilton — Virginia
C. Jackson — City of Detroit, Michigan
M. L. Jordan — Kentucky
E. Kawa, Jr. — Massachusetts
A. Khssassi — Quebec, Canada
J. Klug — City of Milwaukee, Wisconsin
K. J. Kraft — Maryland
K. S. Lane — Alaska
L. C. Leet — City of Seattle, Washington
J. LeSage, Jr. — Louisiana
A. M. Lorimor — South Dakota
M. Mailman — Northwest Territories, Canada
D. E. Mallory — New Hampshire
W. McGivney — City of New York, New York
A. K. Oda — Washington
L. E. Parkey — Indiana
M. Poehlmann — Alberta, Canada
J. F. Porcella — West Virginia
C. F. Reyes — California
M. J. Ryan — City of Chicago, Illinois
D. A. Sandfoss — Nevada
M. H. Sansone — New York
A. S. Scholl — British Columbia, Canada
T. S. Seime — North Dakota
C. S. Selinger — Saskatchewan, Canada
J. E. Sharier — Ohio
N. Smith — Pennsylvania
R. Spiker — North Carolina
D. J. Stenrose — Michigan
R. J. Stimson II — Kansas
R. K. Sturm — Utah
D. K. Sullivan — Arkansas
R. Tomka — Oregon
S. R. Townsend — Prince Edward Island, Canada
R. D. Troutt — Texas
M. C. Vogel — Illinois
T. J. Waldbillig — Wisconsin
D. M. Warburton — Florida
M. Washington — New Jersey

INTERNATIONAL INTEREST REVIEW GROUP

V. Felix
Y.-G. Kim
S. H. Leong
W. Lin
O. F. Manafa
C. Minu
Y.-W. Park
A. R. R. Nogales
P. Williamson

COMMITTEE ON POWER BOILERS (BPV I)

R. E. McLaughlin, *Chair*
E. M. Ortman, *Vice Chair*
U. D'Urso, *Staff Secretary*
D. I. Anderson
J. L. Arnold
D. L. Berger
K. K. Coleman
P. D. Edwards
J. G. Feldstein
G. W. Galanes
T. E. Hansen
J. F. Henry
J. S. Hunter
G. B. Komora
F. Massi
L. Moedinger
P. A. Molvie
Y. Oishi
J. T. Pillow
M. Slater
J. M. Tanzosh
D. E. Tompkins
D. E. Tuttle
J. Vattappilly
M. Wadkinson
R. V. Wielgoszinski
F. Zeller
H. Michael, *Delegate*
D. A. Canonico, *Honorary Member*
D. N. French, *Honorary Member*
J. Hainsworth, *Honorary Member*
C. Jeerings, *Honorary Member*
W. L. Lowry, *Honorary Member*
J. R. MacKay, *Honorary Member*
T. C. McGough, *Honorary Member*
B. W. Roberts, *Honorary Member*
R. D. Schueler, Jr., *Honorary Member*
R. L. Williams, *Honorary Member*
L. W. Yoder, *Honorary Member*

Subgroup on Design (BPV I)

J. Vattappilly, *Chair*
G. B. Komora, *Vice Chair*
D. I. Anderson, *Secretary*
D. Dewees
H. A. Fonzi, Jr.
J. P. Glaspie
L. Krupp
P. A. Molvie
L. S. Tsai
M. Wadkinson
C. F. Jeerings, *Contributing Member*

Subgroup on Fabrication and Examination (BPV I)

J. L. Arnold, *Chair*
P. F. Gilston, *Vice Chair*
P. Becker, *Secretary*
D. L. Berger
S. Fincher
G. W. Galanes
J. Hainsworth
T. E. Hansen
P. Jennings
C. T. McDaris
R. E. McLaughlin
R. J. Newell
Y. Oishi
J. T. Pillow
R. V. Wielgoszinski

Subgroup on General Requirements and Piping (BPV I)

E. M. Ortman, *Chair*
D. E. Tompkins, *Vice Chair*
F. Massi, *Secretary*
P. Becker
D. L. Berger
P. D. Edwards
T. E. Hansen
M. Ishikawa
M. Lemmons
R. E. McLaughlin
B. J. Mollitor
J. T. Pillow
D. E. Tuttle
M. Wadkinson
R. V. Wielgoszinski
C. F. Jeerings, *Contributing Member*
W. L. Lowry, *Contributing Member*

Subgroup on Locomotive Boilers (BPV I)

P. Boschan, *Chair*
J. R. Braun, *Vice Chair*
S. M. Butler, *Secretary*
A. Biesecker
C. Cross
R. C. Franzen, Jr.
G. W. Galanes
D. W. Griner
S. D. Jackson
M. A. Janssen
S. A. Lee
L. Moedinger
G. M. Ray
R. B. Stone
M. W. Westland

Copyright ASME International (BPVC)

Subgroup on Materials (BPV I)

K. K. Coleman, *Chair*
K. Hayes, *Vice Chair*
M. Lewis, *Secretary*
S. H. Bowes
D. A. Canonico
G. W. Galanes
P. F. Gilston
J. F. Henry
J. S. Hunter
E. Liebl
F. Masuyama
M. Ortolani
D. W. Rahoi
J. M. Tanzosh
J. Vattappilly
F. Zeller
M. Gold, *Contributing Member*
B. W. Roberts, *Contributing Member*

Subgroup on Solar Boilers (BPV I)

P. Jennings, *Chair*
R. E. Hearne, *Secretary*
H. A. Fonzi, Jr.
J. S. Hunter
F. Massi
E. M. Ortman

Task Group on Modernization (BPV I)

D. I. Anderson, *Chair*
U. D'Urso, *Staff Secretary*
J. L. Arnold
D. Dewees
G. W. Galanes
J. P. Glaspie
T. E. Hansen
J. F. Henry
R. E. McLaughlin
P. A. Molvie
E. M. Ortman
D. E. Tuttle
J. Vattappilly

Germany International Working Group (BPV I)

A. Spangenberg, *Chair*
M. Bremicker
P. Chavdarov
B. Daume
J. Fleischfresser
R. Helmholdt
R. Kauer
D. Koelbl
S. Krebs
T. Ludwig
R. A. Meyers
H. Michael
F. Miunske
B. Müller
H. Schroeder
M. Sykora
J. Henrichsmeyer, *Contributing Member*
P. Paluszkiewicz, *Contributing Member*
R. Uebel, *Contributing Member*

India International Working Group (BPV I)

H. Dalal, *Chair*
A. R. Patil, *Vice Chair*
T. Dhanraj, *Secretary*
P. Brahma
M. R. Kalahasthi
S. A. Kumar
A. J. Patil
S. Purkait
S. Radhakrishnan
G. V. S. Rao
M. G. Rao
U. Revisankaran
G. U. Shanker
D. K. Shrivastava
K. Singha
S. Venkataramana

COMMITTEE ON MATERIALS (BPV II)

J. Cameron, *Chair*
J. F. Grubb, *Vice Chair*
C. E. O'Brien, *Staff Secretary*
A. Appleton
A. Chaudouet
J. R. Foulds
D. W. Gandy
J. A. Hall
J. F. Henry
K. M. Hottle
M. Ishikawa
F. Masuyama
K. E. Orie
D. W. Rahoi
E. Shapiro
M. J. Slater
R. C. Sutherlin
J. M. Tanzosh
R. G. Young
F. Zeller
O. Oldani, *Delegate*
F. Abe, *Contributing Member*
H. D. Bushfield, *Contributing Member*
D. A. Canonico, *Contributing Member*
D. B. Denis, *Contributing Member*
J. D. Fritz, *Contributing Member*
M. Gold, *Contributing Member*
W. Hoffelner, *Contributing Member*
M. Katcher, *Contributing Member*
R. K. Nanstad, *Contributing Member*
M. L. Nayyar, *Contributing Member*
D. T. Peters, *Contributing Member*
B. W. Roberts, *Contributing Member*
J. J. Sanchez-Hanton, *Contributing Member*
R. W. Swindeman, *Contributing Member*
E. Upitis, *Contributing Member*
T. M. Cullen, *Honorary Member*
W. D. Edsall, *Honorary Member*
G. C. Hsu, *Honorary Member*
R. A. Moen, *Honorary Member*
C. E. Spaeder, Jr., *Honorary Member*
A. W. Zeuthen, *Honorary Member*

Executive Committee (BPV II)

J. Cameron, *Chair*
C. E. O'Brien, *Staff Secretary*
A. Appleton
A. Chaudouet
M. Gold
J. F. Grubb
J. F. Henry
M. Ishikawa
D. L. Kurle
R. W. Mikitka
E. Shapiro
M. J. Slater
R. C. Sutherlin
R. W. Swindeman

Subgroup on External Pressure (BPV II)

D. L. Kurle, *Chair*
S. Guzey, *Vice Chair*
J. A. A. Morrow, *Secretary*
L. F. Campbell
H. Chen
D. S. Griffin
J. F. Grubb
M. H. Jawad
S. Krishnamurthy
R. W. Mikitka
C. R. Thomas
M. Wadkinson
M. Katcher, *Contributing Member*

Subgroup on Ferrous Specifications (BPV II)

A. Appleton, *Chair*
K. M. Hottle, *Vice Chair*
C. Hyde, *Secretary*
H. Chen
B. M. Dingman
M. J. Dosdourian
O. Elkadim
D. Fialkowski
M. Gold
T. Graham
J. M. Grocki
J. F. Grubb
J. Gundlach
D. S. Janikowski
L. J. Lavezzi
S. G. Lee
W. C. Mack
A. S. Melilli
K. E. Orie
D. Poweleit
J. Shick
E. Upitis
R. Zawierucha
J. D. Fritz, *Contributing Member*

Copyright ASME International (BPVC)

Subgroup on International Material Specifications (BPV II)

M. Ishikawa, *Chair*
A. R. Nywening, *Vice Chair*
B. Mruk, *Secretary*
A. Chaudouet
P. Chavdarov
H. Chen
A. F. Garbolevsky
D. O. Henry
W. M. Lundy
E. Upitis
F. Zeller
O. Oldani, *Delegate*
D. A. Canonico, *Contributing Member*
H. Lorenz, *Contributing Member*
T. F. Miskell, *Contributing Member*

Subgroup on Nonferrous Alloys (BPV II)

E. Shapiro, *Chair*
S. Yem, *Vice Chair*
J. Robertson, *Secretary*
R. Beldyk
J. Calland
J. M. Downs
J. F. Grubb
D. Maitra
J. A. McMaster
D. W. Rahoi
W. Ren
R. C. Sutherlin
J. Weritz
R. Wright
D. B. Denis, *Contributing Member*
M. Katcher, *Contributing Member*
D. T. Peters, *Contributing Member*

Subgroup on Physical Properties (BPV II)

J. F. Grubb, *Chair*
G. Aurioles, Sr.
D. Chandiramani
P. Chavdarov
H. Eshraghi
B. F. Hantz
R. D. Jones
P. K. Lam
S. Neilsen
D. W. Rahoi
P. K. Rai
E. Shapiro
M. S. Shelton
D. K. Verma
S. Yem
H. D. Bushfield, *Contributing Member*
D. B. Denis, *Contributing Member*

Subgroup on Strength, Ferrous Alloys (BPV II)

M. J. Slater, *Chair*
S. W. Knowles, *Vice Chair*
D. A. Canonico
A. Di Rienzo
J. R. Foulds
J. A. Hall
J. F. Henry
F. Masuyama
T. Ono
M. Ortolani
D. W. Rahoi
M. S. Shelton
J. M. Tanzosh
R. G. Young
F. Zeller
F. Abe, *Contributing Member*
M. Gold, *Contributing Member*
M. Nair, *Contributing Member*
B. W. Roberts, *Contributing Member*

Subgroup on Strength of Weldments (BPV II & BPV IX)

G. W. Galanes, *Chair*
K. L. Hayes, *Vice Chair*
S. H. Bowes
K. K. Coleman
M. Denault
P. D. Flenner
J. R. Foulds
D. W. Gandy
M. Ghahremani
J. F. Henry
E. Liebl
W. F. Newell, Jr.
J. Penso
D. W. Rahoi
B. W. Roberts
W. J. Sperko
J. P. Swezy, Jr.
J. M. Tanzosh
M. Gold, *Contributing Member*
J. J. Sanchez-Hanton, *Contributing Member*

Working Group on Materials Database (BPV II)

J. F. Henry, *Chair*
C. E. O'Brien, *Staff Secretary*
F. Abe
J. R. Foulds
M. J. Slater
R. C. Sutherlin
D. Andrei, *Contributing Member*
J. L. Arnold, *Contributing Member*
J. Grimes, *Contributing Member*
W. Hoffelner, *Contributing Member*
D. T. Peters, *Contributing Member*
W. Ren, *Contributing Member*
B. W. Roberts, *Contributing Member*
R. W. Swindeman, *Contributing Member*

Working Group on Creep Strength Enhanced Ferritic Steels (BPV II)

J. F. Henry, *Chair*
M. Ortolani, *Vice Chair*
J. A. Siefert, *Secretary*
S. H. Bowes
D. A. Canonico
K. K. Coleman
P. D. Flenner
J. R. Foulds
G. W. Galanes
M. Lang
F. Masuyama
T. Melfi
W. F. Newell, Jr.
J. Parker
J. J. Sanchez-Hanton
W. J. Sperko
J. M. Tanzosh
R. H. Worthington
R. G. Young
F. Zeller
F. Abe, *Contributing Member*
G. Cumino, *Contributing Member*
B. W. Roberts, *Contributing Member*
R. W. Swindeman, *Contributing Member*

Working Group on Data Analysis (BPV II)

J. F. Grubb, *Chair*
J. R. Foulds
J. F. Henry
F. Masuyama
M. Ortolani
W. Ren
M. Subanovic
M. J. Swindeman
F. Abe, *Contributing Member*
M. Gold, *Contributing Member*
W. Hoffelner, *Contributing Member*
M. Katcher, *Contributing Member*
D. T. Peters, *Contributing Member*
B. W. Roberts, *Contributing Member*
R. W. Swindeman, *Contributing Member*

China International Working Group (BPV II)

A. T. Xu, *Secretary*
W. Fang
Q. C. Feng
S. Huo
F. Kong
H. Li
J. Li
S. Li
Z. Rongcan
S. Tan
C. Wang
J. Wang
Q.-J. Wang
X. Wang
F. Yang
G. Yang
H.-C. Yang
J. Yang
R. Ye
L. Yin
D. Zhang
H. Zhang
X.-H. Zhang
Yingkai Zhang
Yong Zhang
Q. Zhao
S. Zhao

Copyright ASME International (BPVC)

COMMITTEE ON CONSTRUCTION OF NUCLEAR FACILITY COMPONENTS (BPV III)

R. S. Hill III, *Chair*
R. B. Keating, *Vice Chair*
J. C. Minichiello, *Vice Chair*
A. Byk, *Staff Secretary*
T. M. Adams
A. Appleton
R. W. Barnes
W. H. Borter
C. W. Bruny
T. D. Burchell
R. P. Deubler
P. R. Donavin
A. C. Eberhardt
J. V. Gardiner
J. Grimm
S. Hunter
R. M. Jessee
R. I. Jetter
C. C. Kim
G. H. Koo
V. Kostarev
M. A. Lockwood
K. A. Manoly
D. E. Matthews
M. N. Mitchell
M. Morishita
D. K. Morton
T. Nagata
J. E. Nestell
E. L. Pleins
R. F. Reedy, Sr.
I. Saito
S. Sham
G. J. Solovey
W. K. Sowder, Jr.
W. J. Sperko
J. P. Tucker
C. S. Withers
H.-T. Wang, *Delegate*
C. T. Smith, *Contributing Member*
M. Zhou, *Contributing Member*
E. B. Branch, *Honorary Member*
G. D. Cooper, *Honorary Member*
D. F. Landers, *Honorary Member*
R. A. Moen, *Honorary Member*
C. J. Pieper, *Honorary Member*
K. R. Wichman, *Honorary Member*

Executive Committee (BPV III)

R. S. Hill III, *Chair*
A. Byk, *Staff Secretary*
T. M. Adams
C. W. Bruny
P. R. Donavin
J. V. Gardiner
J. Grimm
R. B. Keating
J. C. Minichiello
J. A. Munshi
J. E. Nestell
S. Sham
G. J. Solovey
W. K. Sowder, Jr.

Subcommittee on Design (BPV III)

P. R. Donavin, *Chair*
T. M. Adams, *Vice Chair*
R. L. Bratton
C. W. Bruny
R. P. Deubler
M. A. Gray
S. Horowitz
R. I. Jetter
R. B. Keating
K. A. Manoly
R. J. Masterson
D. E. Matthews
S. McKillop
M. N. Mitchell
W. J. O'Donnell, Sr.
S. Sham
J. P. Tucker
W. F. Weitze
T. Yamazaki
J. Yang
R. S. Hill III, *Contributing Member*
G. L. Hollinger, *Contributing Member*
M. H. Jawad, *Contributing Member*
K. Wright, *Contributing Member*

Subgroup on Component Design (SC-D) (BPV III)

T. M. Adams, *Chair*
R. B. Keating, *Vice Chair*
S. Pellet, *Secretary*
D. J. Ammerman
G. A. Antaki
S. Asada
J. F. Ball
C. Basavaraju
D. Chowdhury
R. P. Deubler
P. Hirschberg
M. Kassar
O.-S. Kim
H. Kobayashi
K. A. Manoly
R. J. Masterson
D. E. Matthews
J. C. Minichiello
D. K. Morton
T. M. Musto
T. Nagata
I. Saito
G. C. Slagis
J. R. Stinson
G. Z. Tokarski
J. P. Tucker
P. Vock
C. Wilson
J. Yang
C. W. Bruny, *Contributing Member*
A. A. Dermenjian, *Contributing Member*
K. R. Wichman, *Honorary Member*

Working Group on Core Support Structures (SG-CD) (BPV III)

J. Yang, *Chair*
D. Keck, *Secretary*
L. C. Hartless
J. F. Kielb
T. Liszkai
H. S. Mehta
M. Nakajima
M. D. Snyder
R. Vollmer
T. M. Wiger
Y. Wong
R. Z. Ziegler

Working Group on Design of Division 3 Containment Systems (SG-CD) (BPV III)

D. J. Ammerman, *Chair*
G. Bjorkman
V. Broz
S. Horowitz
S. Klein
D. W. Lewis
J. C. Minichiello
D. K. Morton
X. Zhai
X. Zhang
D. Dunn, *Alternate*
I. D. McInnes, *Contributing Member*
H. P. Shrivastava, *Contributing Member*

Working Group on HDPE Design of Components (SG-CD) (BPV III)

T. M. Musto, *Chair*
J. Ossmann, *Secretary*
T. M. Adams
T. A. Bacon
M. Brandes
S. Choi
J. R. Hebeisen
P. Krishnaswamy
K. A. Manoly
M. Martin
J. C. Minichiello
D. P. Munson
F. J. Schaaf, Jr.
R. Stakenborghs
J. Wright
M. T. Audrain, *Alternate*
D. Burwell, *Contributing Member*

Copyright ASME International (BPVC)

Working Group on Piping (SG-CD) (BPV III)

G. A. Antaki, *Chair*
G. Z. Tokarski, *Secretary*
T. M. Adams
T. A. Bacon
C. Basavaraju
J. Catalano
F. Claeys
C. M. Faidy
R. G. Gilada
N. M. Graham
M. A. Gray
R. J. Gurdal
R. W. Haupt
A. Hirano
P. Hirschberg
M. Kassar
J. Kawahata
R. B. Keating
V. Kostarev
D. Lieb
T. B. Littleton
J. F. McCabe
J. C. Minichiello
I.-K. Nam
G. C. Slagis
N. C. Sutherland
C.-I. Wu
Y. Liu, *Contributing Member*
A. N. Nguyen, *Contributing Member*
M. S. Sills, *Contributing Member*
E. A. Wais, *Contributing Member*

Working Group on Pressure Relief (SG-CD) (BPV III)

J. F. Ball, *Chair*
J. W. Dickson
S. Jones
R. Krithivasan
R. Lack
K. R. May
D. Miller
T. Patel
K. Shores
I. H. Tseng
J. Yu
N. J. Hansing, *Alternate*
B. J. Yonsky, *Alternate*
S. T. French, *Contributing Member*
D. B. Ross, *Contributing Member*

Working Group on Pumps (SG-CD) (BPV III)

D. Chowdhury, *Chair*
J. V. Gregg, Jr., *Secretary*
X. Di
M. D. Eftychiou
C. Gabhart
J. Kikushima
R. Klein
R. Ladefian
W. Lienau
K. J. Noel
R. A. Patrick
J. Sulley
A. G. Washburn
Y. Wong

Working Group on Supports (SG-CD) (BPV III)

J. R. Stinson, *Chair*
U. S. Bandyopadhyay, *Secretary*
K. Avrithi
T. H. Baker
F. J. Birch
R. P. Deubler
N. M. Graham
R. J. Masterson
S. Pellet
I. Saito
C. Stirzel
G. Z. Tokarski
A. Tsirigotis
L. Vandership
P. Wiseman
J. Huang, *Alternate*

Working Group on Valves (SG-CD) (BPV III)

P. Vock, *Chair*
S. Jones, *Secretary*
M. C. Buckley
R. Farrell
G. A. Jolly
J. Lambin
T. Lippucci
C. A. Mizer
H. O'Brien
J. O'Callaghan
K. E. Reid II
J. Sulley
I. H. Tseng
J. P. Tucker
N. J. Hansing, *Alternate*

Working Group on Vessels (SG-CD) (BPV III)

D. E. Matthews, *Chair*
S. Willoughby, *Secretary*
J. Arthur
C. Basavaraju
M. Kassar
R. B. Keating
D. Keck
J. I. Kim
O.-S. Kim
T. Mitsuhashi
D. Murphy
T. J. Schriefer
M. C. Scott
P. K. Shah
J. Shupert
C. Turylo
D. Vlaicu
C. Wilson
T. Yamazaki
R. Z. Ziegler
B. Basu, *Contributing Member*
A. Kalnins, *Contributing Member*
W. F. Weitze, *Contributing Member*

Subgroup on Design Methods (SC-D) (BPV III)

C. W. Bruny, *Chair*
P. R. Donavin, *Vice Chair*
S. McKillop, *Secretary*
K. Avrithi
L. Davies
S. R. Gosselin
M. A. Gray
J. V. Gregg, Jr.
H. T. Harrison III
K. Hsu
D. Keck
J. I. Kim
M. N. Mitchell
W. J. O'Donnell, Sr.
W. D. Reinhardt
P. Smith
S. D. Snow
R. Vollmer
W. F. Weitze
K. Wright
T. M. Adams, *Contributing Member*

Working Group on Design Methodology (SG-DM) (BPV III)

S. McKillop, *Chair*
R. Vollmer, *Secretary*
K. Avrithi
C. Basavaraju
D. L. Caldwell
C. M. Faidy
R. Farrell
H. T. Harrison III
C. F. Heberling II
P. Hirschberg
M. Kassar
R. B. Keating
J. I. Kim
H. Kobayashi
T. Liszkai
J. F. McCabe
S. Ranganath
W. D. Reinhardt
P. K. Shah
S. D. Snow
S. Wang
W. F. Weitze
J. Wen
T. M. Wiger
K. Wright
J. Yang
R. D. Blevins, *Contributing Member*
M. R. Breach, *Contributing Member*

Working Group on Environmental Effects (SG-DM) (BPV III)

L. Davies, *Chair*
B. D. Frew, *Secretary*
P. J. Dobson
J. I. Kim
J. E. Nestell
M. Osterfoss
T. J. Schriefer
I. H. Tseng

Working Group on Environmental Fatigue Evaluation Methods (SG-DM) (BPV III)

M. A. Gray, *Chair*
W. F. Weitze, *Secretary*
T. M. Adams
S. Asada
K. Avrithi
R. C. Cipolla
T. M. Damiani
C. M. Faidy
T. D. Gilman
S. R. Gosselin
Y. He
P. Hirschberg
H. S. Mehta
T. Metais
J.-S. Park
B. Pellereau
I. Saito
D. Vlaicu
K. Wang
K. Wright
R. Z. Ziegler

Copyright ASME International (BPVC)

Working Group on Fatigue Strength (SG-DM) (BPV III)

P. R. Donavin, *Chair*
M. S. Shelton, *Secretary*
T. M. Damiani
C. M. Faidy
P. Gill
S. R. Gosselin
R. J. Gurdal
C. F. Heberling II
C. E. Hinnant
P. Hirschberg
K. Hsu
S. H. Kleinsmith
S. Majumdar
S. N. Malik
H. S. Mehta
S. Mohanty
S. Ranganath
A. Tsirigotis
D. Dewees, *Contributing Member*
W. J. O'Donnell, Sr., *Contributing Member*
K. Wright, *Contributing Member*

Working Group on Graphite and Composite Design (SG-DM) (BPV III)

M. N. Mitchell, *Chair*
T. D. Burchell, *Secretary*
A. Appleton
S.-H. Chi
W. J. Geringer
S. T. Gonczy
M. G. Jenkins
Y. Katoh
J. Ossmann
W. Windes
A. Yeshnik
S. Yu
G. L. Zeng
N. McMurray, *Alternate*

Working Group on Probabilistic Methods in Design (SG-DM) (BPV III)

M. Golliet, *Chair*
T. Asayama
K. Avrithi
G. Brouette
J. Hakii
D. O. Henry
R. S. Hill III
M. Morishita
P. J. O'Regan
I. Saito

Special Working Group on Computational Modeling for Explicit Dynamics (SG-DM) (BPV III)

G. Bjorkman, *Chair*
D. J. Ammerman, *Vice Chair*
V. Broz, *Secretary*
M. R. Breach
J. M. Jordan
S. Kuehner
D. Molitoris
W. D. Reinhardt
P. Y.-K. Shih
S. D. Snow
C.-F. Tso
M. C. Yaksh
U. Zencker
A. Rigato, *Alternate*

Subgroup on Elevated Temperature Design (SC-D) (BPV III)

S. Sham, *Chair*
T. Asayama
C. Becht IV
F. W. Brust
P. Carter
M. E. Cohen
B. F. Hantz
M. H. Jawad
R. I. Jetter
K. Kimura
G. H. Koo
T. Le
J. E. Nestell
R. Wright
A. B. Hull, *Alternate*
D. S. Griffin, *Contributing Member*
S. Majumdar, *Contributing Member*
D. L. Marriott, *Contributing Member*
W. J. O'Donnell, Sr., *Contributing Member*
R. W. Swindeman, *Contributing Member*

Working Group on Allowable Stress Criteria (SG-ETD) (BPV III)

R. Wright, *Chair*
M. J. Swindeman, *Secretary*
C. J. Johns
K. Kimura
T. Le
D. Maitra
M. McMurtrey
J. E. Nestell
W. Ren
S. Sham
X. Wei
S. N. Malik, *Alternate*
J. R. Foulds, *Contributing Member*
R. W. Swindeman, *Contributing Member*

Working Group on Analysis Methods (SG-ETD) (BPV III)

P. Carter, *Chair*
M. J. Swindeman, *Secretary*
M. E. Cohen
R. I. Jetter
T. Le
M. C. Messner
S. Sham
X. Wei
A. Tsirigotis, *Alternate*
S. Krishnamurthy, *Contributing Member*

Working Group on Creep-Fatigue and Negligible Creep (SG-ETD) (BPV III)

T. Asayama, *Chair*
F. W. Brust
P. Carter
M. E. Cohen
R. I. Jetter
G. H. Koo
T. Le
B.-L. Lyow
M. McMurtrey
M. C. Messner
H. Qian
S. Sham
Y. Wang
X. Wei
N. McMurray, *Alternate*

Working Group on Elevated Temperature Construction (SG-ETD) (BPV III)

A. Mann, *Chair*
C. Nadarajah, *Secretary*
D. I. Anderson
D. Dewees
B. F. Hantz
M. H. Jawad
R. I. Jetter
S. Krishnamurthy
T. Le
M. N. Mitchell
P. Prueter
M. J. Swindeman
N. McMurray, *Alternate*
J. P. Glaspie, *Contributing Member*
D. L. Marriott, *Contributing Member*
B. J. Mollitor, *Contributing Member*

Working Group on High Temperature Flaw Evaluation (SG-ETD) (BPV III)

F. W. Brust, *Chair*
P. Carter
S. Kalyanam
T. Le
M. C. Messner
H. Qian
P. J. Rush
D.-J. Shim
X. Wei
S. X. Xu
N. McMurray, *Alternate*

Special Working Group on Inelastic Analysis Methods (SG-ETD) (BPV III)

M. C. Messner, *Chair*
S. X. Xu, *Secretary*
R. W. Barnes
J. A. Blanco
T. Hassan
G. H. Koo
B.-L. Lyow
S. Sham
M. J. Swindeman
X. Wei
G. L. Zeng

--`,,```,,,,````-`-`,,`,,`,`,,`---

Copyright ASME International (BPVC)

Subgroup on General Requirements (BPV III)

J. V. Gardiner, *Chair*
J. Rogers, *Secretary*
V. Apostolescu
A. Appleton
S. Bell
J. R. Berry
G. Brouette
J. W. Highlands
E. V. Imbro
K. A. Kavanagh
Y.-S. Kim
B. McGlone
E. C. Renaud
T. N. Rezk
D. J. Roszman
W. K. Sowder, Jr.
R. Spuhl
G. E. Szabatura
D. M. Vickery
C. S. Withers
J. DeKleine, *Contributing Member*
H. Michael, *Contributing Member*
C. T. Smith, *Contributing Member*

Working Group on Duties and Responsibilities (SG-GR) (BPV III)

S. Bell, *Chair*
N. DeSantis, *Secretary*
J. R. Berry
P. J. Coco
Y. Diaz-Castillo
J. V. Gardiner
E. V. Imbro
K. A. Kavanagh
D. J. Roszman
B. S. Sandhu
J. L. Williams
J. DeKleine, *Contributing Member*

Working Group on Quality Assurance, Certification, and Stamping (SG-GR) (BPV III)

B. McGlone, *Chair*
J. Grimm, *Secretary*
V. Apostolescu
A. Appleton
G. Brouette
O. Elkadim
S. M. Goodwin
J. Harris
J. W. Highlands
K. A. Kavanagh
Y.-S. Kim
D. T. Meisch
R. B. Patel
E. C. Renaud
T. N. Rezk
J. Rogers
W. K. Sowder, Jr.
R. Spuhl
J. F. Strunk
G. E. Szabatura
D. M. Vickery
C. S. Withers
C. A. Spletter, *Contributing Member*

Special Working Group on General Requirements Consolidation (SG-GR) (BPV III)

J. V. Gardiner, *Chair*
C. T. Smith, *Vice Chair*
S. Bell
M. B. Cusick
Y. Diaz-Castillo
J. Grimm
J. M. Lyons
B. McGlone
R. B. Patel
E. C. Renaud
T. N. Rezk
J. Rogers
D. J. Roszman
B. S. Sandhu
G. J. Solovey
R. Spuhl
G. E. Szabatura
J. L. Williams
C. S. Withers
S. F. Harrison, Jr., *Contributing Member*

Working Group on General Requirements for Graphite and Ceramic Composite Core Components and Assemblies (SG-GR) (BPV III)

A. Appleton, *Chair*
W. J. Geringer, *Secretary*
J. R. Berry
T. D. Burchell
M. N. Mitchell
E. C. Renaud
W. Windes
A. Yeshnik
N. McMurray, *Alternate*

Subgroup on Materials, Fabrication, and Examination (BPV III)

J. Grimm, *Chair*
B. D. Frew, *Vice Chair*
S. Hunter, *Secretary*
W. H. Borter
T. D. Burchell
S. Cho
P. J. Coco
R. H. Davis
G. B. Georgiev
S. E. Gingrich
M. Golliet
L. S. Harbison
R. M. Jessee
J. Johnston, Jr.
C. C. Kim
M. Lashley
T. Melfi
I.-K. Nam
J. Ossmann
J. E. O'Sullivan
M. C. Scott
W. J. Sperko
J. R. Stinson
J. F. Strunk
W. Windes
R. Wright
S. Yee
H. Michael, *Delegate*
R. W. Barnes, *Contributing Member*
G. R. Cannell, *Contributing Member*
D. B. Denis, *Contributing Member*

Working Group on Graphite and Composite Materials (SG-MFE) (BPV III)

T. D. Burchell, *Chair*
M. N. Mitchell, *Secretary*
A. Appleton
R. L. Bratton
S. R. Cadell
S.-H. Chi
A. Covac
S. W. Doms
S. F. Duffy
W. J. Geringer
S. T. Gonzcy
M. G. Jenkins
Y. Katoh
J. Ossmann
M. Roemmler
N. Salstrom
T. Shibata
W. Windes
A. Yeshnik
S. Yu
G. L. Zeng
N. McMurray, *Alternate*

Working Group on HDPE Materials (SG-MFE) (BPV III)

G. Brouette, *Chair*
M. A. Martin, *Secretary*
W. H. Borter
M. C. Buckley
M. Golliet
J. Hakii
J. Johnston, Jr.
P. Krishnaswamy
D. P. Munson
T. M. Musto
S. Patterson
S. Schuessler
R. Stakenborghs
M. Troughton
J. Wright
B. Hauger, *Contributing Member*

Joint ACI-ASME Committee on Concrete Components for Nuclear Service (BPV III)

J. A. Munshi, *Chair*
J. McLean, *Vice Chair*
J. Cassamassino, *Staff Secretary*
C. J. Bang
L. J. Colarusso
A. C. Eberhardt
F. Farzam
P. S. Ghosal
B. D. Hovis
T. C. Inman
C. Jones
O. Jovall
T. Kang
N.-H. Lee
T. Muraki
N. Orbovic
J. F. Strunk
G. Thomas
T. Tonyan
S. Wang
J. F. Artuso, *Contributing Member*
S. Bae, *Contributing Member*
J.-B. Domage, *Contributing Member*
B. B. Scott, *Contributing Member*
M. R. Senecal, *Contributing Member*
Z. Shang, *Contributing Member*
M. Sircar, *Contributing Member*
C. T. Smith, *Contributing Member*

Copyright ASME International (BPVC)

Working Group on Design (BPV III-2)

N.-H. Lee, *Chair*
S. Wang, *Vice Chair*
M. Allam
S. Bae
L. J. Colarusso
A. C. Eberhardt
F. Farzam
P. S. Ghosal
B. D. Hovis
T. C. Inman
C. Jones
O. Jovall
J. A. Munshi
T. Muraki
G. Thomas
M. Diaz, *Contributing Member*
A. Istar, *Contributing Member*
S.-Y. Kim, *Contributing Member*
J. Kwon, *Contributing Member*
B. R. Laskewitz, *Contributing Member*
B. B. Scott, *Contributing Member*
Z. Shang, *Contributing Member*
M. Shin, *Contributing Member*
M. Sircar, *Contributing Member*

Working Group on Materials, Fabrication, and Examination (BPV III-2)

T. Tonyan, *Chair*
A. Eberhardt, *Vice Chair*
M. Allam
C. J. Bang
B. Birch
J.-B. Domage
P. S. Ghosal
C. Jones
T. Kang
N.-H. Lee
Z. Shang
J. F. Strunk
I. Zivanovic
J. F. Artuso, *Contributing Member*
B. B. Scott, *Contributing Member*

Special Working Group on Modernization (BPV III-2)

N. Orbovic, *Chair*
J. McLean, *Vice Chair*
A. Adediran
O. Jovall
N. Stoeva
S. Wang
I. Zivanovic
J.-B. Domage, *Contributing Member*
F. Lin, *Contributing Member*
M. A. Ugalde, *Contributing Member*

Subgroup on Containment Systems for Spent Nuclear Fuel and High-Level Radioactive Material (BPV III)

G. J. Solovey, *Chair*
D. J. Ammerman, *Vice Chair*
G. Bjorkman
V. Broz
S. Horowitz
S. Klein
D. W. Lewis
D. K. Morton
E. L. Pleins
J. Wellwood
X. J. Zhai
D. Dunn, *Alternate*
W. H. Borter, *Contributing Member*
P. E. McConnell, *Contributing Member*
N. M. Simpson, *Contributing Member*
R. H. Smith, *Contributing Member*

Subgroup on Fusion Energy Devices (BPV III)

W. K. Sowder, Jr., *Chair*
D. Andrei, *Staff Secretary*
D. J. Roszman, *Secretary*
M. Bashir
L. C. Cadwallader
B. R. Doshi
G. Holtmeier
K. A. Kavanagh
K. Kim
I. Kimihiro
S. Lee
G. Li
X. Li
P. Mokaria
T. R. Muldoon
M. Porton
F. J. Schaaf, Jr.
P. Smith
Y. Song
M. Trosen
C. Waldon
I. J. Zatz
R. W. Barnes, *Contributing Member*

Working Group on General Requirements (BPV III-4)

D. J. Roszman, *Chair*
W. K. Sowder, Jr.

Working Group on In-Vessel Components (BPV III-4)

M. Bashir, *Chair*
Y. Carin
M. Kalsey

Working Group on Magnets (BPV III-4)

S. Lee, *Chair*
K. Kim, *Vice Chair*

Working Group on Materials (BPV III-4)

M. Porton, *Chair*
P. Mummery

Working Group on Vacuum Vessels (BPV III-4)

I. Kimihiro, *Chair*
L. C. Cadwallader
B. R. Doshi
Q. Shijun
Y. Song

Subgroup on High Temperature Reactors (BPV III)

J. E. Nestell, *Chair*
N. Broom
T. D. Burchell
M. E. Cohen
R. I. Jetter
G. H. Koo
D. K. Morton
S. Sham
W. Windes
A. Yeshnik
G. L. Zeng
N. McMurray, *Alternate*
X. Li, *Contributing Member*
M. Morishita, *Contributing Member*
L. Shi, *Contributing Member*

Working Group on High Temperature Gas-Cooled Reactors (BPV III-5)

J. E. Nestell, *Chair*
N. Broom
T. D. Burchell
R. I. Jetter
Y. W. Kim
T. Le
D. K. Morton
S. Sham
G. L. Zeng
S. N. Malik, *Alternate*
X. Li, *Contributing Member*
L. Shi, *Contributing Member*

Working Group on High Temperature Liquid-Cooled Reactors (BPV III-5)

S. Sham, *Chair*
M. Arcaro
T. Asayama
R. W. Barnes
P. Carter
M. E. Cohen
A. B. Hull
R. I. Jetter
G. H. Koo
T. Le
J. E. Nestell
X. Wei
C. Moyer, *Alternate*
S. Majumdar, *Contributing Member*
M. Morishita, *Contributing Member*
G. Wu, *Contributing Member*

--`,```,,,,,,````,,`,``,,`,`,`-`-`,,`,,`,`,,`---

Copyright ASME International (BPVC)

Argentina International Working Group (BPV III)

J. Fernández, *Chair*
A. Politi, *Vice Chair*
O. Martinez, *Staff Secretary*
A. Gomez, *Secretary*
A. Acrogliano
W. Agrelo
G. O. Anteri
M. Anticoli
C. A. Araya
J. P. Balbiani
A. A. Betervide
D. O. Bordato
G. Bourguigne
M. L. Cappella
A. Claus
R. G. Cocco
A. Coleff
A. J. Dall'Osto
L. M. De Barberis
D. P. Delfino
D. N. Dell'Erba
F. G. Diez
A. Dominguez
S. A. Echeverria
E. P. Fresquet
M. M. Gamizo
I. M. Guerreiro
R. S. Hill III
I. A. Knorr
M. F. Liendo
L. R. Miño
J. Monte
R. L. Morard
A. E. Pastor
E. Pizzichini
J. L. Racamato
H. C. Sanzi
G. J. Scian
G. G. Sebastian
M. E. Szarko
P. N. Torano
A. Turrin
O. A. Verastegui
M. D. Vigliano
P. Yamamoto
M. Zunino

China International Working Group (BPV III)

J. Yan, *Chair*
W. Tang, *Vice Chair*
Y. He, *Secretary*
L. Guo
Y. Jing
D. Kang
Y. Li
B. Liang
H. Lin
S. Liu
W. Liu
J. Ma
K. Mao
D. E. Matthews
W. Pei
G. Sun
Z. Sun
G. Tang
L. Ting
Y. Tu
Y. Wang
H. Wu
X. Wu
S. Xue
Z. Yin
G. Zhang
W. Zhang
W. Zhao
Y. Zhong
Z. Zhong

German International Working Group (BPV III)

J. Wendt, *Chair*
D. Koelbl, *Vice Chair*
R. Gersinska, *Secretary*
H.-R. Bath
P. R. Donavin
R. Döring
A. Huber
R. E. Hueggenberg
C. Huttner
E. Iacopetta
M. H. Koeppen
C. Kuschke
H.-W. Lange
T. Ludwig
X. Pitoiset
M. Reichert
G. Roos
J. Rudolph
H. Schau
L. Sybert
R. Trieglaff
F. Wille
S. Zickler

India International Working Group (BPV III)

R. N. Sen, *Chair*
S. B. Parkash, *Vice Chair*
A. D. Bagdare, *Secretary*
S. Aithal
H. Dalal
S. Kovalai
D. Kulkarni
R. Kumar
E. I. Pleins
M. Ponnusamy
K. R. Shah
B. K. Sreedhar

Korea International Working Group (BPV III)

G. H. Koo, *Chair*
S. S. Hwang, *Vice Chair*
O.-S. Kim, *Secretary*
H. S. Byun
S. Cho
G.-S. Choi
S. Choi
J. Y. Hong
N.-S. Huh
J.-K. Hwang
C. Jang
I. I. Jeong
H. J. Kim
J.-I. Kim
J.-S. Kim
K. Kim
M.-W. Kim
S.-S. Kim
Y.-B. Kim
Y.-S. Kim
D. Kwon
B. Lee
D. Lee
Sanghoon Lee
Sangil Lee
S.-G. Lee
H. Lim
I.-K. Nam
B. Noh
C.-K. Oh
C. Park
H. Park
J.-S. Park
Y. S. Pyun
T. Shin
S. Song
W. J. Sperko
J. S. Yang
O. Yoo

Special Working Group on Editing and Review (BPV III)

D. E. Matthews, *Chair*
R. L. Bratton
R. P. Deubler
A. C. Eberhardt
S. Horowitz
J. C. Minichiello
R. F. Reedy, Sr.
C. Wilson

Special Working Group on HDPE Stakeholders (BPV III)

M. Brandes, *Chair*
S. Patterson, *Secretary*
T. M. Adams
S. Choi
C. M. Faidy
M. Golliet
R. M. Jessee
J. Johnston, Jr.
M. Lashley
K. A. Manoly
D. P. Munson
T. M. Musto
J. E. O'Sullivan
V. Rohatgi
F. J. Schaaf, Jr.
R. Stakenborghs
M. Troughton
J. Wright
D. Burwell, *Contributing Member*

Special Working Group on Honors and Awards (BPV III)

R. M. Jessee, *Chair*
A. Appleton
R. W. Barnes
D. E. Matthews
J. C. Minichiello

Special Working Group on Industry Experience for New Plants (BPV III & BPV XI)

J. T. Lindberg, *Chair*
J. Ossmann, *Chair*
M. C. Buckley, *Secretary*
A. Cardillo
T. L. Chan
P. J. Hennessey
D. O. Henry
J. Honcharik
C. G. Kim
O.-S. Kim
K. Matsunaga
D. E. Matthews
R. E. McLaughlin
D. W. Sandusky
T. Tsuruta
R. M. Wilson
S. M. Yee
A. Tsirigotis, *Alternate*

Copyright ASME International (BPVC)

Special Working Group on International Meetings (BPV III)

D. E. Matthews, *Chair*
A. Byk, *Staff Secretary*
R. W. Barnes
T. D. Burchell
R. L. Crane
P. R. Donavin
R. S. Hill III
M. N. Mitchell
E. L. Pleins
R. F. Reedy, Sr.
C. A. Sanna
W. J. Sperko

Special Working Group on New Plant Construction Issues (BPV III)

E. L. Pleins, *Chair*
M. C. Scott, *Secretary*
A. Cardillo
P. J. Coco
J. Honcharik
E. V. Imbro
O.-S. Kim
M. Kris
J. C. Minichiello
D. W. Sandusky
R. R. Stevenson
M. L. Wilson
H. Xu
J. Yan
N. J. Hansing, *Alternate*
A. Byk, *Contributing Member*

Special Working Group on Regulatory Interface (BPV III)

E. V. Imbro, *Chair*
P. Malouines, *Secretary*
S. Bell
A. Cardillo
P. J. Coco
J. Grimm
J. Honcharik
K. Matsunaga
D. E. Matthews
B. McGlone
A. T. Roberts III
R. R. Stevenson
M. L. Wilson
N. J. Hansing, *Alternate*

COMMITTEE ON HEATING BOILERS (BPV IV)

J. A. Hall, *Chair*
T. L. Bedeaux, *Vice Chair*
C. R. Ramcharran, *Staff Secretary*
B. Calderon
J. Calland
J. P. Chicoine
J. M. Downs
J. L. Kleiss
J. Klug
P. A. Molvie
R. D. Troutt
M. Wadkinson
R. V. Wielgoszinski
H. Michael, *Delegate*
D. Picart, *Delegate*
B. J. Iske, *Alternate*
A. Heino, *Contributing Member*
S. V. Voorhees, *Contributing Member*

Subgroup on Care and Operation of Heating Boilers (BPV IV)

R. D. Troutt, *Chair*
C. R. Ramcharran, *Staff Secretary*
B. Ahee
T. L. Bedeaux
J. Calland
J. M. Downs
J. A. Hall
J. L. Kleiss
P. A. Molvie
M. Wadkinson
C. Lasarte, *Contributing Member*

Subgroup on Cast Boilers (BPV IV)

J. P. Chicoine, *Chair*
C. R. Ramcharran, *Staff Secretary*
T. L. Bedeaux
J. M. Downs
J. A. Hall
J. L. Kleiss
M. Mengon

Subgroup on Materials (BPV IV)

M. Wadkinson, *Chair*
C. R. Ramcharran, *Staff Secretary*
L. Badziagowski
T. L. Bedeaux
J. Calland
J. M. Downs
J. A. Hall
B. J. Iske

Subgroup on Water Heaters (BPV IV)

J. Calland, *Chair*
C. R. Ramcharran, *Staff Secretary*
B. Ahee
L. Badziagowski
J. P. Chicoine
C. Dinic
B. J. Iske
J. L. Kleiss
P. A. Molvie
M. A. Taylor
T. E. Trant
R. D. Troutt

Subgroup on Welded Boilers (BPV IV)

P. A. Molvie, *Chair*
C. R. Ramcharran, *Staff Secretary*
B. Ahee
L. Badziagowski
T. L. Bedeaux
B. Calderon
J. Calland
C. Dinic
J. L. Kleiss
M. Mengon
R. D. Troutt
M. Wadkinson
R. V. Wielgoszinski

COMMITTEE ON NONDESTRUCTIVE EXAMINATION (BPV V)

G. W. Hembree, *Chair*
N. A. Finney, *Vice Chair*
C. R. Ramcharran, *Staff Secretary*
J. Bennett
P. L. Brown
M. A. Burns
N. Carter
C. Emslander
A. F. Garbolevsky
J. F. Halley
P. T. Hayes
S. A. Johnson
F. B. Kovacs
B. D. Laite
C. May
L. E. Mullins
A. B. Nagel
T. L. Plasek
F. J. Sattler
P. B. Shaw
C. Vorwald
G. M. Gatti, *Delegate*
X. Guiping, *Delegate*
S. J. Akrin, *Contributing Member*
J. E. Batey, *Contributing Member*
A. S. Birks, *Contributing Member*
N. Y. Faransso, *Contributing Member*
R. W. Kruzic, *Contributing Member*
H. C. Graber, *Honorary Member*
O. F. Hedden, *Honorary Member*
J. R. MacKay, *Honorary Member*
T. G. McCarty, *Honorary Member*

Executive Committee (BPV V)

N. A. Finney, *Chair*
G. W. Hembree, *Vice Chair*
C. R. Ramcharran, *Staff Secretary*
C. Emslander
S. A. Johnson
F. B. Kovacs
A. B. Nagel
C. Vorwald

Subgroup on General Requirements/Personnel Qualifications and Inquiries (BPV V)

C. Emslander, *Chair*
N. Carter, *Vice Chair*
J. Bennett
T. Clausing
N. A. Finney
G. W. Hembree
S. A. Johnson
F. B. Kovacs
K. Krueger
C. May
D. I. Morris
A. B. Nagel
S. J. Akrin, *Contributing Member*
J. E. Batey, *Contributing Member*
A. S. Birks, *Contributing Member*
N. Y. Faransso, *Contributing Member*
J. P. Swezy, Jr., *Contributing Member*

Copyright ASME International (BPVC)

Subgroup on Surface Examination Methods (BPV V)

S. A. Johnson, *Chair*
C. May, *Vice Chair*
P. L. Brown
N. Carter
T. Clausing
N. Farenbaugh
N. A. Finney
J. F. Halley
K. Hayes
G. W. Hembree
B. D. Laite
L. E. Mullins
A. B. Nagel
F. J. Sattler
P. B. Shaw
M. Wolf
D. Woodward
G. M. Gatti, *Delegate*
S. J. Akrin, *Contributing Member*
J. E. Batey, *Contributing Member*
A. S. Birks, *Contributing Member*
N. Y. Faransso, *Contributing Member*
R. W. Kruzic, *Contributing Member*

Subgroup on Volumetric Methods (BPV V)

A. B. Nagel, *Chair*
C. May, *Vice Chair*
P. L. Brown
J. M. Davis
N. A. Finney
A. F. Garbolevsky
J. F. Halley
R. W. Hardy
P. T. Hayes
G. W. Hembree
S. A. Johnson
F. B. Kovacs
C. Magruder
L. E. Mullins
T. L. Plasek
F. J. Sattler
C. Vorwald
G. M. Gatti, *Delegate*
S. J. Akrin, *Contributing Member*
J. E. Batey, *Contributing Member*
N. Y. Faransso, *Contributing Member*
R. W. Kruzic, *Contributing Member*

Special Working Group on Advanced Ultrasonic Testing Technique (BPV V)

L. E. Mullins, *Chair*
K. Krueger, *Vice Chair*
D. Adkins
D. Bajula
N. A. Finney
J. L. Garner
J. F. Haley
P. T. Hayes
M. Lozev
C. Magruder
M. Sens

Special Working Group on Full Matrix Capture (FMC) Ultrasonic Testing (BPV V)

P. T. Hayes, *Chair*
K. Hayes, *Vice Chair*
D. Adkins
D. Bajula
D. Braconnier
J. Catty
B. Erne
S. Falter
N. A. Finney
J. L. Garner
R. T. Grotenhuis
J. F. Halley
G. W. Hembree
B. D. Laite
F. Laprise
M. Lozev
C. Magruder
F. Morrow
L. E. Mullins
A. B. Nagel
E. Peloquin
D. Richard
M. Sens
D. Tompkins
J. Vinyard
O. Volf
C. Wassink

Special Working Group on the Use of Unmanned Aerial Vehicles/ Systems for Inspection (BPV V)

G. W. Hembree, *Chair*
P. J. Coco, *Vice Chair*
L. Pulgarin, *Staff Secretary*
A. Bloye
T. Cinson
J. DiPalma
M. Ellis
S. Flash
R. T. Grotenhuis
K. Hayes
P. T. Hayes
R. Janowiak
C. May
L. E. Mullins
M. Orihuela
L. Petrosky
P. C. Prahl
J. Schroeter
K. Schupp
M. Sens
A. T. Taggart
R. Vayda
K. H. Kim, *Delegate*
R. J. Winn, *Delegate*
L. Zhang, *Delegate*
Q. Chen, *Contributing Member*
A. Cook, *Contributing Member*
A. E. Krauser, *Contributing Member*
X. Wen, *Contributing Member*
F. Wu, *Contributing Member*
Y. Yang, *Contributing Member*

Working Group on Acoustic Emissions (SG-VM) (BPV V)

N. Y. Faransso, *Chair*
S. R. Doctor, *Vice Chair*
J. Catty
V. F. Godinez-Azcuaga
R. K. Miller
M. A. Gonzalez, *Alternate*
J. E. Batey, *Contributing Member*

Working Group on Radiography (SG-VM) (BPV V)

C. Vorwald, *Chair*
F. B. Kovacs, *Vice Chair*
J. Anderson
P. L. Brown
C. Emslander
A. F. Garbolevsky
R. W. Hardy
G. W. Hembree
C. Johnson
S. A. Johnson
B. D. Laite
C. May
R. J. Mills
A. B. Nagel
T. L. Plasek
T. Vidimos
B. White
D. Woodward
S. J. Akrin, *Contributing Member*
J. E. Batey, *Contributing Member*
N. Y. Faransso, *Contributing Member*
R. W. Kruzic, *Contributing Member*

Working Group on Ultrasonics (SG-VM) (BPV V)

N. A. Finney, *Chair*
J. F. Halley, *Vice Chair*
D. Adkins
C. Brown
J. M. Davis
C. Emslander
P. T. Hayes
S. A. Johnson
K. Krueger
B. D. Laite
C. Magruder
C. May
L. E. Mullins
A. B. Nagel
K. Page
F. J. Sattler
D. Tompkins
D. Van Allen
J. Vinyard
C. Vorwald
N. Y. Faransso, *Contributing Member*
R. W. Kruzic, *Contributing Member*

Working Group on Guided Wave Ultrasonic Testing (SG-VM) (BPV V)

N. Y. Faransso, *Chair*
S. A. Johnson, *Vice Chair*
D. Alleyne
J. F. Halley
G. M. Light
P. Mudge
M. J. Quarry
J. Vanvelsor
J. E. Batey, *Contributing Member*

Copyright ASME International (BPVC)

Italy International Working Group (BPV V)

P. L. Dinelli, *Chair*
A. Veroni, *Secretary*
T. Aldo
R. Bertolotti
F. Bresciani
G. Campos
N. Caputo
M. Colombo
F. Ferrarese
E. Ferrari
M. A. Grimoldi
G. Luoni
O. Oldani
U. Papponetti
P. Pedersoli
M. Zambon
G. Gobbi, *Contributing Member*
G. Pontiggia, *Contributing Member*

COMMITTEE ON PRESSURE VESSELS (BPV VIII)

R. J. Basile, *Chair*
S. C. Roberts, *Vice Chair*
E. Lawson, *Staff Secretary*
S. J. Rossi, *Staff Secretary*
G. Aurioles, Sr.
J. Cameron
A. Chaudouet
D. B. DeMichael
J. P. Glaspie
J. F. Grubb
B. F. Hantz
L. E. Hayden, Jr.
M. Kowalczyk
D. L. Kurle
M. D. Lower
R. Mahadeen
S. A. Marks
R. W. Mikitka
G. M. Mital
B. R. Morelock
T. P. Pastor
D. T. Peters
M. J. Pischke
M. D. Rana
G. B. Rawls, Jr.
F. L. Richter
C. D. Rodery
J. C. Sowinski
D. Srnic
D. B. Stewart
P. L. Sturgill
D. A. Swanson
J. P. Swezy, Jr.
S. Terada
E. Upitis
A. Viet
K. Xu
P. A. McGowan, *Delegate*
H. Michael, *Delegate*
K. Oyamada, *Delegate*
M. E. Papponetti, *Delegate*
X. Tang, *Delegate*
W. S. Jacobs, *Contributing Member*
G. G. Karcher, *Contributing Member*
K. T. Lau, *Contributing Member*
U. R. Miller, *Contributing Member*
K. Mokhtarian, *Contributing Member*
K. K. Tam, *Honorary Member*

Executive Committee (BPV VIII)

S. C. Roberts, *Chair*
S. J. Rossi, *Staff Secretary*
G. Aurioles, Sr.
R. J. Basile
M. Kowalczyk
D. L. Kurle
M. D. Lower
R. Mahadeen
S. A. Marks
G. M. Mital
D. A. Swanson
A. Viet

Subgroup on Design (BPV VIII)

D. A. Swanson, *Chair*
J. C. Sowinski, *Vice Chair*
M. Faulkner, *Secretary*
G. Aurioles, Sr.
S. R. Babka
O. A. Barsky
R. J. Basile
M. R. Breach
F. L. Brown
D. Chandiramani
B. F. Hantz
C. E. Hinnant
C. S. Hinson
M. H. Jawad
S. Krishnamurthy
D. L. Kurle
M. D. Lower
R. W. Mikitka
B. Millet
T. P. Pastor
M. D. Rana
G. B. Rawls, Jr.
S. C. Roberts
C. D. Rodery
T. G. Seipp
D. Srnic
S. Terada
J. Vattappilly
R. A. Whipple
K. Xu
K. Oyamada, *Delegate*
M. E. Papponetti, *Delegate*
W. S. Jacobs, *Contributing Member*
P. K. Lam, *Contributing Member*
K. Mokhtarian, *Contributing Member*
S. C. Shah, *Contributing Member*
K. K. Tam, *Contributing Member*
E. Upitis, *Contributing Member*
Z. Wang, *Contributing Member*

Working Group on Design-By-Analysis (BPV VIII)

B. F. Hantz, *Chair*
T. W. Norton, *Secretary*
D. A. Arnett
R. G. Brown
D. Dewees
C. F. Heberling II
C. E. Hinnant
M. H. Jawad
S. Kataoka
S. Kilambi
K. D. Kirkpatrick
S. Krishnamurthy
A. Mann
N. McKie
G. A. Miller
C. Nadarajah
P. Prueter
M. D. Rana
T. G. Seipp
M. A. Shah
S. Terada
K. Saboda, *Contributing Member*

Subgroup on Fabrication and Examination (BPV VIII)

S. A. Marks, *Chair*
E. A. Whittle, *Vice Chair*
T. Halligan, *Secretary*
B. R. Morelock, *Secretary*
N. Carter
D. I. Morris
O. Mulet
M. J. Pischke
M. J. Rice
C. D. Rodery
B. F. Shelley
P. L. Sturgill
J. P. Swezy, Jr.
E. Upitis
K. Oyamada, *Delegate*
W. J. Bees, *Contributing Member*
L. F. Campbell, *Contributing Member*
W. S. Jacobs, *Contributing Member*
J. Lee, *Contributing Member*
J. Si, *Contributing Member*
R. Uebel, *Contributing Member*
X. Xue, *Contributing Member*
B. Yang, *Contributing Member*

Subgroup on General Requirements (BPV VIII)

M. D. Lower, *Chair*
J. P. Glaspie, *Vice Chair*
F. L. Richter, *Secretary*
R. J. Basile
T. P. Beirne
D. T. Davis
D. B. DeMichael
M. Faulkner
F. Hamtak
L. E. Hayden, Jr.
J. Hoskinson
T. P. Pastor
D. K. Peetz
G. B. Rawls, Jr.
S. C. Roberts
J. C. Sowinski
P. Speranza
D. Srnic
D. B. Stewart
D. A. Swanson
R. Uebel
Z. Wang, *Contributing Member*
Y. Yang, *Contributing Member*

Copyright ASME International (BPVC)

Task Group on Fired Heater Pressure Vessels (BPV VIII)

F. Hamtak, *Chair*
J. Hoskinson
W. Kim
S. Kirk
T. P. Pastor
J. Rust
E. Smith
D. Srnic
J. P. Swezy, Jr.

Task Group on Subsea Applications (BPV VIII)

K. Karpanan, *Chair*
M. Sarzynski, *Vice Chair*
L. P. Antalffy
R. C. Biel
P. Bunch
J. Ellens
A. J. Grohmann
S. Harbert
X. Kaculi
F. Kirkemo
C. Lan
N. McKie
S. K. Parimi
J. R. Sims
Y. Wada
R. Cordes, *Contributing Member*
D. T. Peters, *Contributing Member*

Task Group on UG-20(f) (BPV VIII)

S. Krishnamurthy, *Chair*
T. L. Anderson
K. E. Bagnoli
R. P. Deubler
B. F. Hantz
B. R. Macejko
J. Penso
M. Prager
M. D. Rana

Task Group on U-2(g) (BPV VIII)

D. A. Swanson, *Chair*
G. Aurioles, Sr.
S. R. Babka
R. J. Basile
D. K. Chandiramani
R. Mahadeen
T. W. Norton
T. P. Pastor
R. F. Reedy, Sr.
S. C. Roberts
D. Srnic
J. P. Swezy, Jr.
R. Uebel
K. K. Tam, *Contributing Member*

Subgroup on Heat Transfer Equipment (BPV VIII)

G. Aurioles, Sr., *Chair*
P. Matkovics, *Vice Chair*
M. D. Clark, *Secretary*
D. Angstadt
S. R. Babka
J. H. Barbee
O. A. Barsky
L. Bower
T. Bunyarattaphantu
A. Chaudouet
D. L. Kurle
R. Mahadeen
S. Mayeux
S. Neilsen
E. Smith
A. M. Voytko
R. P. Wiberg
I. G. Campbell, *Contributing Member*
G. G. Karcher, *Contributing Member*
T. W. Norton, *Contributing Member*
J. Pasek, *Contributing Member*
D. Srnic, *Contributing Member*
Z. Tong, *Contributing Member*

Working Group on Plate Heat Exchangers (BPV VIII)

P. Matkovics, *Chair*
S. R. Babka
K. Devlin
J. F. Grubb
V. Gudge
F. Hamtak
R. Mahadeen
S. A. Marks
D. I. Morris
M. J. Pischke
D. Srnic
S. Sullivan

Subgroup on High Pressure Vessels (BPV VIII)

G. M. Mital, *Chair*
K. Subramanian, *Vice Chair*
A. P. Maslowski, *Staff Secretary*
L. P. Antalffy
R. C. Biel
P. N. Chaku
L. Fridlund
R. T. Hallman
J. A. Kapp
K. Karpanan
A. K. Khare
S. C. Mordre
G. T. Nelson
D. T. Peters
E. A. Rodriguez
E. D. Roll
K. C. Simpson, Jr.
J. R. Sims
E. Smith
F. W. Tatar
S. Terada
C. Tipple
J. L. Traud
R. Wink
Y. Xu
R. Cordes, *Contributing Member*
R. D. Dixon, *Contributing Member*
R. M. Hoshman, *Contributing Member*
Y. Huang, *Contributing Member*
J. Keltjens, *Contributing Member*
F. Kirkemo, *Contributing Member*
K.-J. Young, *Contributing Member*
D. J. Burns, *Honorary Member*
D. M. Fryer, *Honorary Member*
G. J. Mraz, *Honorary Member*
E. H. Perez, *Honorary Member*

Subgroup on Materials (BPV VIII)

M. Kowalczyk, *Chair*
J. Cameron, *Vice Chair*
K. Xu, *Secretary*
P. Chavdarov
A. Di Rienzo
J. F. Grubb
S. Kilambi
D. Maitra
J. Penso
D. W. Rahoi
J. Robertson
R. C. Sutherlin
E. Upitis
J. D. Fritz, *Contributing Member*
M. Katcher, *Contributing Member*
W. M. Lundy, *Contributing Member*
J. A. McMaster, *Contributing Member*
B. Pletcher, *Contributing Member*
R. Schiavi, Jr., *Contributing Member*
P. G. Wittenbach, *Contributing Member*
X. Wu, *Contributing Member*

Subgroup on Toughness (BPV VIII)

D. L. Kurle, *Chair*
K. Xu, *Vice Chair*
N. Carter
T. Halligan
W. S. Jacobs
S. Krishnamurthy
K. E. Orie
M. D. Rana
F. L. Richter
K. Subramanian
D. A. Swanson
J. P. Swezy, Jr.
S. Terada
E. Upitis
J. Vattappilly
K. Oyamada, *Delegate*
K. Mokhtarian, *Contributing Member*

Subgroup on Graphite Pressure Equipment (BPV VIII)

A. Viet, *Chair*
C. W. Cary, *Vice Chair*
G. C. Becherer
F. L. Brown
J. D. Clements
R. W. Dickerson
E. Soltow
A. A. Stupica

Copyright ASME International (BPVC)

China International Working Group (BPV VIII)

X. Chen, *Chair*
B. Shou, *Vice Chair*
Z. Fan, *Secretary*
Y. Chen
Z. Chen
J. Cui
R. Duan
W. Guo
B. Han
J. Hu
Q. Hu
H. Hui
D. Luo
Y. Luo
C. Miao
X. Qian
L. Sun
B. Wang
C. Wu
F. Xu
F. Xuan
Y. Yang
K. Zhang
Yanfeng Zhang
Yijun Zhang
S. Zhao
J. Zheng
G. Zhu

Germany International Working Group (BPV VIII)

P. Chavdarov, *Chair*
A. Spangenberg, *Vice Chair*
H. P. Schmitz, *Secretary*
B. Daume
A. Emrich
J. Fleischfresser
R. Helmholdt
R. Kauer
D. Koelbl
S. Krebs
T. Ludwig
R. A. Meyers
H. Michael
G. Naumann
S. Reich
M. Sykora
P. Paluszkiewicz, *Contributing Member*
R. Uebel, *Contributing Member*

India International Working Group (BPV VIII)

D. Chandiramani, *Chair*
D. Kulkarni, *Vice Chair*
A. D. Dalal, *Secretary*
P. Arulkumar
B. Basu
P. U. Gandhi
V. Jayabalan
P. C. Pathak
S. B. Patil
V. V. P. Kumar
M. P. Shah
P. G. Shah
V. T. Valavan
M. Sharma, *Contributing Member*

Italy International Working Group (BPV VIII)

A. Teli, *Chair*
A. Veroni, *Secretary*
B. G. Alborali
P. Aliprandi
A. Avogadri
R. Boatti
A. Camanni
M. Colombo
P. Conti
P. L. Dinelli
F. Finco
M. Guglielmetti
A. F. Magri
P. Mantovani
M. Massobrio
M. Millefanti
L. Moracchioli
P. Pacor
G. Pontiggia
C. Sangaletti
S. Sarti
G. Gobbi, *Contributing Member*

Special Working Group on Bolted Flanged Joints (BPV VIII)

R. W. Mikitka, *Chair*
G. Aurioles, Sr.
D. Bankston, Jr.
W. Brown
H. Chen
A. Mann
W. McDaniel
M. Osterfoss
J. R. Payne
G. B. Rawls, Jr.
R. Wacker

Task Group on Impulsively Loaded Vessels (BPV VIII)

A. M. Clayton, *Chair*
G. A. Antaki
D. D. Barker
J. E. Didlake, Jr.
T. A. Duffey
K. Hayashi
K. W. King
R. Kitamura
R. A. Leishear
P. O. Leslie
F. Ohlson
E. A. Rodriguez
C. Romero
N. Rushton
J. H. Stofleth
Q. Dong, *Contributing Member*
H.-P. Schildberg, *Contributing Member*
J. E. Shepherd, *Contributing Member*
M. Yip, *Contributing Member*

Subgroup on Interpretations (BPV VIII)

R. Mahadeen, *Chair*
E. Lawson, *Staff Secretary*
G. Aurioles, Sr.
S. R. Babka
R. J. Basile
J. Cameron
N. Carter
C. W. Cary
D. B. DeMichael
R. D. Dixon
M. Kowalczyk
D. L. Kurle
M. D. Lower
A. Mann
P. Matkovics
G. M. Mital
D. I. Morris
D. T. Peters
S. C. Roberts
C. D. Rodery
T. G. Seipp
D. B. Stewart
P. L. Sturgill
D. A. Swanson
J. P. Swezy, Jr.
J. Vattappilly
A. Viet
P. G. Wittenbach
K. Xu
T. P. Pastor, *Contributing Member*

COMMITTEE ON WELDING, BRAZING, AND FUSING (BPV IX)

D. A. Bowers, *Chair*
M. J. Pischke, *Vice Chair*
E. Lawson, *Staff Secretary*
M. Bernasek
M. A. Boring
J. G. Feldstein
P. D. Flenner
S. E. Gingrich
K. L. Hayes
R. M. Jessee
J. S. Lee
W. M. Lundy
T. Melfi
W. F. Newell, Jr.
D. K. Peetz
J. Pillow
E. G. Reichelt
M. J. Rice
M. B. Sims
W. J. Sperko
P. L. Sturgill
J. P. Swezy, Jr.
E. W. Woelfel
A. Roza, *Delegate*
M. Consonni, *Contributing Member*
S. A. Jones, *Contributing Member*
A. S. Olivares, *Contributing Member*
S. Raghunathan, *Contributing Member*
M. J. Stanko, *Contributing Member*
P. L. Van Fosson, *Contributing Member*
R. K. Brown, Jr., *Honorary Member*
M. L. Carpenter, *Honorary Member*
B. R. Newmark, *Honorary Member*
S. D. Reynolds, Jr., *Honorary Member*

Subgroup on Brazing (BPV IX)

M. J. Pischke, *Chair*
E. W. Beckman
A. F. Garbolevsky
S. A. Marks
N. Mohr
A. R. Nywening
J. P. Swezy, Jr.

Copyright ASME International (BPVC)

Subgroup on General Requirements (BPV IX)

P. L. Sturgill, *Chair*
S. A. Marks, *Secretary*
E. W. Beckman
J. P. Bell
D. A. Bowers
P. Gilston
F. Hamtak
A. Howard
R. M. Jessee
D. K. Peetz
J. Pillow
H. B. Porter
J. P. Swezy, Jr.
E. W. Woelfel
E. Molina, *Delegate*
B. R. Newmark, *Honorary Member*

Subgroup on Materials (BPV IX)

M. Bernasek, *Chair*
T. Anderson
J. L. Arnold
E. Cutlip
S. E. Gingrich
L. S. Harbison
R. M. Jessee
T. Melfi
S. D. Nelson
M. J. Pischke
A. Roza
C. E. Sainz
W. J. Sperko
P. L. Sturgill
J. Warren
C. Zanfir
V. G. V. Giunto, *Delegate*
B. Krueger, *Contributing Member*
M. J. Stanko, *Contributing Member*

Subgroup on Plastic Fusing (BPV IX)

E. W. Woelfel, *Chair*
D. Burwell
K. L. Hayes
R. M. Jessee
J. Johnston, Jr.
J. E. O'Sullivan
E. G. Reichelt
M. J. Rice
S. Schuessler
M. Troughton
J. Wright

Subgroup on Welding Qualifications (BPV IX)

M. J. Rice, *Chair*
J. S. Lee, *Vice Chair*
K. L. Hayes, *Secretary*
M. Bernasek
M. A. Boring
D. A. Bowers
R. B. Corbit
P. D. Flenner
L. S. Harbison
M. Heinrichs
W. M. Lundy
T. Melfi
W. F. Newell, Jr.
B. R. Newton
S. Raghunathan
E. G. Reichelt
M. B. Sims
W. J. Sperko
S. A. Sprague
P. L. Sturgill
J. P. Swezy, Jr.
T. C. Wiesner
A. D. Wilson
D. Chandiramani, *Contributing Member*
M. Consonni, *Contributing Member*
M. Dehghan, *Contributing Member*

Germany International Working Group (BPV IX)

P. Chavdarov, *Chair*
A. Spangenberg, *Vice Chair*
E. Lawson, *Staff Secretary*
P. Thiebo, *Secretary*
J. Daldrup
B. Daume
E. Floer
R. Helmholdt
S. Krebs
T. Ludwig
G. Naumann
A. Roza
K.-G. Toelle
F. Wodke

Italy International Working Group (BPV IX)

A. Camanni, *Chair*
A. Veroni, *Secretary*
P. Angelini
M. Bernasek
R. Boatti
P. L. Dinelli
F. Ferrarese
E. Lazzari
M. Mandina
M. Massobrio
A. S. Monastra
L. Moracchioli
P. Pacor
G. Pontiggia
S. Verderame
A. Volpi
G. Gobbi, *Contributing Member*

COMMITTEE ON FIBER-REINFORCED PLASTIC PRESSURE VESSELS (BPV X)

B. Linnemann, *Chair*
B. F. Shelley, *Vice Chair*
P. D. Stumpf, *Staff Secretary*
A. L. Beckwith
F. L. Brown
J. L. Bustillos
B. R. Colley
T. W. Cowley
I. L. Dinovo
D. Eisberg
M. R. Gorman
B. Hebb
L. E. Hunt
D. L. Keeler
D. H. McCauley
N. L. Newhouse
G. Ramirez
J. R. Richter
D. O. Yancey, Jr.
P. H. Ziehl
D. H. Hodgkinson, *Contributing Member*

COMMITTEE ON NUCLEAR INSERVICE INSPECTION (BPV XI)

R. W. Swayne, *Chair*
S. D. Kulat, *Vice Chair*
D. W. Lamond, *Vice Chair*
K. Verderber, *Staff Secretary*
V. L. Armentrout
J. F. Ball
W. H. Bamford
M. L. Benson
J. M. Boughman
S. B. Brown
T. L. Chan
R. C. Cipolla
D. R. Cordes
D. D. Davis
H. Do
R. L. Dyle
E. V. Farrell, Jr.
M. J. Ferlisi
P. D. Fisher
E. B. Gerlach
T. J. Griesbach
J. Hakii
M. L. Hall
D. O. Henry
D. R. Lee
J. T. Lindberg
G. A. Lofthus
H. Malikowski
G. Navratil
S. A. Norman
J. E. O'Sullivan
N. A. Palm
G. C. Park
A. T. Roberts III
D. A. Scarth
F. J. Schaaf, Jr.
J. C. Spanner, Jr.
D. J. Tilly
D. E. Waskey
J. G. Weicks
H. D. Chung, *Delegate*
C. Ye, *Delegate*
W. C. Holston, *Alternate*
R. O. McGill, *Alternate*
T. Nuoffer, *Alternate*
B. R. Newton, *Contributing Member*
C. D. Cowfer, *Honorary Member*
R. E. Gimple, *Honorary Member*
F. E. Gregor, *Honorary Member*
O. F. Hedden, *Honorary Member*
R. D. Kerr, *Honorary Member*
P. C. Riccardella, *Honorary Member*
R. A. West, *Honorary Member*
C. J. Wirtz, *Honorary Member*
R. A. Yonekawa, *Honorary Member*

Executive Committee (BPV XI)

S. D. Kulat, *Chair*
R. W. Swayne, *Vice Chair*
K. Verderber, *Staff Secretary*
W. H. Bamford
M. L. Benson
R. L. Dyle
M. J. Ferlisi
E. B. Gerlach
D. W. Lamond
J. T. Lindberg
G. Navratil
T. Nuoffer
G. C. Park
J. C. Spanner, Jr.
W. C. Holston, *Alternate*

Copyright ASME International (BPVC)

Argentina International Working Group (BPV XI)

F. M. Schroeter, *Chair*
M. F. Liendo, *Vice Chair*
O. Martinez, *Staff Secretary*
D. A. Cipolla
A. Claus
D. Costa
D. P. Delfino
D. N. Dell'Erba
A. Dominguez
S. A. Echeverria
E. P. Fresquet
M. M. Gamizo
I. M. Guerreiro
F. Llorente
R. J. Lopez
M. Magliocchi
L. R. Miño
J. Monte
M. D. Pereda
A. Politi
C. G. Real
G. J. Scian
M. J. Solari
P. N. Torano
P. Yamamoto

China International Working Group (BPV XI)

J. H. Liu, *Chair*
Y. Nie, *Vice Chair*
C. Ye, *Vice Chair*
M. W. Zhou, *Secretary*
J. F. Cai
H. Chen
H. D. Chen
Y. Cheng
Y. B. Guo
Y. Hongqi
D. R. Horn
Y. Hou
D. M. Kang
S. X. Lin
Y. Liu
W. N. Pei
L. Shiwei
Y. X. Sun
G. X. Tang
Q. Wang
Q. W. Wang
Z. S. Wang
L. Xing
F. Xu
Q. Yin
K. Zhang
Y. Zhang
Y. Zhe
Z. M. Zhong

German International Working Group (BPV XI)

R. Döring, *Chair*
R. Trieglaff, *Vice Chair*
R. Piel, *Secretary*
H.-R. Bath
A. Casse
S. Dugan
M. Hagenbruch
E. Iacopetta
H.-W. Lange
N. Legl
T. Ludwig
X. Pitoiset
M. Reichert
H. Schau
L. Sybertz
J. Wendt
S. Zickler

Special Working Group on Editing and Review (BPV XI)

R. W. Swayne, *Chair*
M. Orihuela
K. R. Rao
D. J. Tilly

Task Group on Inspectability (BPV XI)

J. T. Lindberg, *Chair*
M. J. Ferlisi, *Secretary*
W. H. Bamford
A. Cardillo
D. R. Cordes
P. Gionta
D. O. Henry
E. Henry
J. Honcharik
J. Howard
R. Klein
C. Latiolais
D. Lieb
G. A. Lofthus
D. E. Matthews
P. J. O'Regan
J. Ossmann
S. A. Sabo
P. Sullivan
C. Thomas
J. Tucker

Task Group on ISI of Spent Nuclear Fuel Storage and Transportation Containment Systems (BPV XI)

K. Hunter, *Chair*
M. Orihuela, *Secretary*
D. J. Ammerman
W. H. Borter
J. Broussard
S. Brown
C. R. Bryan
T. Carraher
D. Dunn
N. Fales
R. C. Folley
G. Grant
B. Gutherman
S. Horowitz
M. W. Joseph
M. Keene
M. Liu
K. Mauskar
R. M. Meyer
B. L. Montgomery
T. Nuoffer
R. M. Pace
E. L. Pleins
M. A. Richter
B. Sarno
R. Sindelar
J. C. Spanner, Jr.
M. Staley
J. Wellwood
X. J. Zhai
P.-S. Lam, *Alternate*
G. White, *Alternate*
J. Wise, *Alternate*
H. Smith, *Contributing Member*

Subgroup on Evaluation Standards (SG-ES) (BPV XI)

W. H. Bamford, *Chair*
N. A. Palm, *Secretary*
M. Brumovsky
H. D. Chung
R. C. Cipolla
C. M. Faidy
B. R. Ganta
T. J. Griesbach
K. Hasegawa
K. Hojo
D. N. Hopkins
D. R. Lee
Y. S. Li
R. O. McGill
H. S. Mehta
K. Miyazaki
R. M. Pace
J. C. Poehler
S. Ranganath
D. A. Scarth
D.-J. Shim
G. L. Stevens
A. Udyawar
T. V. Vo
G. M. Wilkowski
S. X. Xu
M. L. Benson, *Alternate*

Task Group on Evaluation of Beyond Design Basis Events (SG-ES) (BPV XI)

R. M. Pace, *Chair*
S. X. Xu, *Secretary*
G. A. Antaki
P. R. Donavin
R. G. Gilada
T. J. Griesbach
M. Hayashi
K. Hojo
S. A. Kleinsmith
H. S. Mehta
D. V. Sommerville
T. V. Vo
K. R. Wichman
G. M. Wilkowski
T. Weaver, *Contributing Member*

Copyright ASME International (BPVC)

Working Group on Flaw Evaluation (SG-ES) (BPV XI)

R. C. Cipolla, *Chair*
S. X. Xu, *Secretary*
W. H. Bamford
M. L. Benson
B. Bezensek
M. Brumovsky
H. D. Chung
T. E. Demers
M. A. Erickson
C. M. Faidy
M. M. Farooq
B. R. Ganta
R. G. Gilada
F. D. Hayes
P. H. Hoang
K. Hojo
D. N. Hopkins
Y. Kim
V. Lacroix
D. R. Lee
Y. S. Li
M. Liu
H. S. Mehta
G. A. A. Miessi
K. Miyazaki
S. Noronha
R. K. Qashu
S. Ranganath
P. J. Rush
D. A. Scarth
W. L. Server
D.-J. Shim
S. Smith
M. Uddin
A. Udyawar
T. V. Vo
B. Wasiluk
K. R. Wichman
G. M. Wilkowski

Working Group on Flaw Evaluation Reference Curves (BPV XI)

G. L. Stevens, *Chair*
A. Udyawar, *Secretary*
W. H. Bamford
M. L. Benson
F. W. Brust
R. C. Cipolla
M. M. Farooq
A. E. Freed
K. Hasegawa
D. N. Hopkins
R. Janowiak
K. Kashima
K. Koyama
D. R. Lee
H. S. Mehta
K. Miyazaki
B. Pellereau
S. Ranganath
D. A. Scarth
D.-J. Shim
S. Smith
T. V. Vo
S. X. Xu

Working Group on Operating Plant Criteria (SG-ES) (BPV XI)

N. A. Palm, *Chair*
A. E. Freed, *Secretary*
K. R. Baker
W. H. Bamford
M. Brumovsky
T. L. Dickson
R. L. Dyle
M. A. Erickson
T. J. Griesbach
M. Hayashi
R. Janowiak
S. A. Kleinsmith
H. Kobayashi
H. S. Mehta
A. D. Odell
R. M. Pace
J. C. Poehler
S. Ranganath
W. L. Server
C. A. Tomes
A. Udyawar
T. V. Vo
D. P. Weakland
H. Q. Xu
T. Hardin, *Alternate*

Working Group on Pipe Flaw Evaluation (SG-ES) (BPV XI)

D. A. Scarth, *Chair*
G. M. Wilkowski, *Secretary*
K. Azuma
M. L. Benson
M. Brumovsky
F. W. Brust
H. D. Chung
R. C. Cipolla
N. G. Cofie
T. E. Demers
C. M. Faidy
M. M. Farooq
B. R. Ganta
S. R. Gosselin
C. E. Guzman-Leong
K. Hasegawa
P. H. Hoang
K. Hojo
D. N. Hopkins
E. J. Houston
R. Janowiak
S. Kalyanam
K. Kashima
V. Lacroix
Y. S. Li
R. O. McGill
H. S. Mehta
G. A. A. Miessi
K. Miyazaki
S. H. Pellet
P. J. Rush
W. L. Server
D.-J. Shim
S. Smith
A. Udyawar
T. V. Vo
B. Wasiluk
S. X. Xu
A. Alleshwaram, *Alternate*

Task Group on Evaluation Procedures for Degraded Buried Pipe (WG-PFE) (BPV XI)

R. O. McGill, *Chair*
S. X. Xu, *Secretary*
F. G. Abatt
G. A. Antaki
R. C. Cipolla
R. G. Gilada
K. Hasegawa
K. M. Hoffman
R. Janowiak
M. Kassar
M. Moenssens
D. P. Munson
R. M. Pace
P. J. Rush
D. A. Scarth

Subgroup on Nondestructive Examination (SG-NDE) (BPV XI)

J. C. Spanner, Jr., *Chair*
D. R. Cordes, *Secretary*
M. Briley
C. Brown
T. L. Chan
S. E. Cumblidge
K. J. Hacker
J. Harrison
D. O. Henry
J. T. Lindberg
G. A. Lofthus
S. A. Sabo
F. J. Schaaf, Jr.
R. V. Swain
C. A. Nove, *Alternate*

Working Group on Personnel Qualification and Surface Visual and Eddy Current Examination (SG-NDE) (BPV XI)

J. T. Lindberg, *Chair*
C. Brown, *Secretary*
J. E. Aycock
J. Bennett
S. E. Cumblidge
A. Diaz
N. Farenbaugh
D. O. Henry
C. Shinsky
J. C. Spanner, Jr.
T. Thulien
J. T. Timm

Working Group on Procedure Qualification and Volumetric Examination (SG-NDE) (BPV XI)

G. A. Lofthus, *Chair*
J. Harrison, *Secretary*
M. Briley
A. Bushmire
D. R. Cordes
S. R. Doctor
K. J. Hacker
W. A. Jensen
D. A. Kull
C. A. Nove
S. A. Sabo
R. V. Swain
S. J. Todd
D. K. Zimmerman
B. Lin, *Alternate*

Copyright ASME International (BPVC)

Subgroup on Repair/Replacement Activities (SG-RRA) (BPV XI)

E. B. Gerlach, *Chair*
E. V. Farrell, Jr., *Secretary*
J. F. Ball
M. Brandes
S. B. Brown
R. Clow
P. D. Fisher
M. L. Hall
S. L. McCracken
A. B. Meichler
B. R. Newton
J. E. O'Sullivan
G. C. Park
P. Raynaud
R. R. Stevenson
R. W. Swayne
D. J. Tilly
D. E. Waskey
J. G. Weicks
W. C. Holston, *Alternate*

Working Group on Welding and Special Repair Processes (SG-RRA) (BPV XI)

D. E. Waskey, *Chair*
D. J. Tilly, *Secretary*
D. Barborak
S. J. Findlan
P. D. Fisher
R. C. Folley
M. L. Hall
W. C. Holston
C. C. Kim
M. Kris
S. E. Marlette
S. L. McCracken
D. B. Meredith
B. R. Newton
J. E. O'Sullivan
D. Segletes
J. G. Weicks

Task Group on Temper Bead Welding (BPV XI)

S. J. Findlan, *Chair*
D. Barborak
M. L. Hall
S. L. McCracken
D. B. Meredith
N. Mohr
B. R. Newton
J. E. O'Sullivan
D. Segletes
J. Tatman
D. J. Tilly
D. E. Waskey
J. G. Weicks

Task Group on Weld Overlay (BPV XI)

S. L. McCracken, *Chair*
S. J. Findlan
M. L. Hall
S. Hunter
S. E. Marlette
D. B. Meredith
P. Raynaud
D. Segletes
D. E. Waskey
J. G. Weicks

Working Group on Non-Metals Repair/Replacement Activities (SG-RRA) (BPV XI)

J. E. O'Sullivan, *Chair*
S. Schuessler, *Secretary*
M. Brandes
J. Johnston, Jr.
M. Lashley
M. P. Marohl
T. M. Musto
S. Patterson
A. Pridmore
P. Raynaud
F. J. Schaaf, Jr.
R. Stakenborghs

Task Group on Repair by Carbon Fiber Composites (WGN-MRR) (BPV XI)

J. E. O'Sullivan, *Chair*
S. F. Arnold
S. W. Choi
D. R. Dechene
M. Golliet
L. S. Gordon
M. Kuntz
M. P. Marohl
C. A. Nove
R. P. Ojdrovic
A. Pridmore
P. Raynaud
S. Rios
V. Roy
J. Sealey
N. Stoeva
M. F. Uddin
J. Wen
B. Davenport, *Alternate*
C. W. Rowley, *Alternate*

Working Group on Design and Programs (SG-RRA) (BPV XI)

S. B. Brown, *Chair*
A. B. Meichler, *Secretary*
O. Bhatty
R. Clow
R. R. Croft
E. V. Farrell, Jr.
E. B. Gerlach
H. Malikowski
G. C. Park
M. A. Pyne
P. Raynaud
R. R. Stevenson
R. W. Swayne

Task Group on Risk-Informed Categorization and Treatment (BPV XI)

S. L. McCracken, *Chair*
T. Anselmi
H. Do
M. J. Ferlisi
E. B. Gerlach
K. W. Hall
A. E. Keyser
S. D. Kulat
D. W. Lamond
A. B. Meichler
G. Navratil
S. A. Norman
P. J. O'Regan
J. E. O'Sullivan
M. Ralstin
T. V. Vo
J. G. Weicks

Subgroup on Water-Cooled Systems (SG-WCS) (BPV XI)

G. Navratil, *Chair*
J. Nygaard, *Secretary*
J. M. Agold
V. L. Armentrout
J. M. Boughman
S. B. Brown
S. T. Chesworth
D. D. Davis
H. Q. Do
R. L. Dyle
M. J. Ferlisi
K. W. Hall
P. J. Hennessey
K. M. Hoffman
S. D. Kulat
D. W. Lamond
T. Nomura
T. Nuoffer
H. M. Stephens, Jr.
M. Weis
M. J. Homiack, *Alternate*

Task Group on High Strength Nickel Alloys Issues (SG-WCS) (BPV XI)

H. Malikowski, *Chair*
W. H. Bamford
K. Dietrich
P. R. Donavin
R. L. Dyle
K. M. Hoffman
C. Lohse
S. E. Marlette
B. L. Montgomery
G. C. Park
W. Sims
J. C. Spanner, Jr.
D. E. Waskey

Working Group on Containment (SG-WCS) (BPV XI)

H. M. Stephens, Jr., *Chair*
S. G. Brown, *Secretary*
P. S. Ghosal
H. T. Hill
B. Lehman
J. A. Munshi
M. Sircar
P. C. Smith
F. Syed
R. Thames
S. Walden

Copyright ASME International (BPVC)

Working Group on Inspection of Systems and Components (SG-WCS) (BPV XI)

M. J. Ferlisi, *Chair*
M. Weis, *Secretary*
J. M. Agold
R. W. Blyde
K. Caver
C. Cueto-Felgueroso
H. Q. Do
K. W. Hall
M. L. G. Heras
K. M. Hoffman
J. Howard
S. D. Kulat
E. Lantz
G. J. Navratil
T. Nomura
J. C. Nygaard
J. C. Younger

Working Group on Pressure Testing (SG-WCS) (BPV XI)

J. M. Boughman, *Chair*
S. A. Norman, *Secretary*
T. Anselmi
B. Casey
Y.-K. Chung
M. J. Homiack
A. E. Keyser
D. W. Lamond
J. K. McClanahan
T. P. McClure
B. L. Montgomery
C. Thomas

Task Group on Buried Components Inspection and Testing (WG-PT) (BPV XI)

D. W. Lamond, *Chair*
J. M. Boughman, *Secretary*
M. Moenssens, *Secretary*
T. Anselmi
V. L. Armentrout
B. Davenport
A. Hiser
J. Ossmann
S. Rios

Working Group on Risk-Informed Activities (SG-WCS) (BPV XI)

M. A. Pyne, *Chair*
S. T. Chesworth, *Secretary*
J. M. Agold
C. Cueto-Felgueroso
A. E. Freed
J. Hakii
K. W. Hall
M. J. Homiack
S. D. Kulat
D. W. Lamond
E. Lantz
G. J. Navratil
P. J. O'Regan
N. A. Palm
D. Vetter
J. C. Younger

Working Group on General Requirements (BPV XI)

T. Nuoffer, *Chair*
J. Mayo, *Secretary*
J. F. Ball
T. L. Chan
P. J. Hennessey
A. T. Roberts III

Subgroup on Reliability and Integrity Management Program (SG-RIM) (BPV XI)

F. J. Schaaf, Jr., *Chair*
A. T. Roberts III, *Secretary*
T. Anselmi
N. Broom
S. R. Doctor
J. D. Fletcher
J. T. Fong
T. Graham
J. Grimm
B. Heald
D. M. Jones
D. R. Lee
B. Lin
R. K. Miller
R. W. Swayne
S. Takaya
R. Vayda

Working Group on MANDE (BPV XI)

H. M. Stephens, Jr., *Chair*
S. R. Doctor
N. A. Finney
J. T. Fong
D. O. Henry
L. E. Mullins
M. Turnbow

JSME/ASME Joint Task Group for System-Based Code (SWG-RIM) (BPV XI)

T. Asayama, *Chair*
S. R. Doctor
K. Dozaki
M. Hayashi
D. M. Jones
Y. Kamishima
D. R. Lee
H. Machida
A. T. Roberts III
F. J. Schaaf, Jr.
S. Takaya
D. Watanabe

COMMITTEE ON TRANSPORT TANKS (BPV XII)

N. J. Paulick, *Chair*
M. D. Rana, *Vice Chair*
J. Oh, *Staff Secretary*
A. N. Antoniou
P. Chilukuri
W. L. Garfield
M. Pitts
T. A. Rogers
S. Staniszewski
A. P. Varghese
Y. Doron, *Contributing Member*
R. Meyers, *Contributing Member*
M. R. Ward, *Contributing Member*

Executive Committee (BPV XII)

M. D. Rana, *Chair*
N. J. Paulick, *Vice Chair*
J. Oh, *Staff Secretary*
M. Pitts
S. Staniszewski
A. P. Varghese

Subgroup on Design and Materials (BPV XII)

A. P. Varghese, *Chair*
R. C. Sallash, *Secretary*
D. K. Chandiramani
P. Chilukuri
Y. Doron
R. D. Hayworth
S. L. McWilliams
N. J. Paulick
M. D. Rana
T. A. Rogers
M. Shah
S. Staniszewski
K. Xu
A. T. Duggleby, *Contributing Member*
G. G. Karcher, *Contributing Member*
M. R. Ward, *Contributing Member*
J. Zheng, *Contributing Member*

Subgroup on Fabrication, Inspection, and Continued Service (BPV XII)

M. Pitts, *Chair*
P. Chilukuri
Y. Doron
W. Garfield
R. D. Hayworth
O. Mulet
J. Roberts
T. A. Rogers
M. Rudek
R. C. Sallash
L. Selensky
S. Staniszewski
S. E. Benet, *Contributing Member*
G. McRae, *Contributing Member*
A. S. Olivares, *Contributing Member*

Copyright ASME International (BPVC)

Subgroup on General Requirements (BPV XII)

S. Staniszewski, *Chair*
A. N. Antoniou
Y. Doron
J. L. Freiler
W. L. Garfield
O. Mulet
B. F. Pittel
M. Pitts
T. Rummel
R. C. Sallash
L. Selensky
P. Chilukuri, *Contributing Member*
T. J. Hitchcock, *Contributing Member*
G. McRae, *Contributing Member*
S. L. McWilliams, *Contributing Member*
T. A. Rogers, *Contributing Member*
D. G. Shelton, *Contributing Member*
M. R. Ward, *Contributing Member*

Subgroup on Nonmandatory Appendices (BPV XII)

N. J. Paulick, *Chair*
S. Staniszewski, *Secretary*
P. Chilukuri
M. Pitts
T. A. Rogers
D. G. Shelton
S. E. Benet, *Contributing Member*
D. D. Brusewitz, *Contributing Member*
Y. Doron, *Contributing Member*
T. J. Hitchcock, *Contributing Member*

COMMITTEE ON OVERPRESSURE PROTECTION (BPV XIII)

D. B. DeMichael, *Chair*
J. P. Glaspie, *Vice Chair*
C. E. O'Brien, *Staff Secretary*
J. F. Ball
J. Burgess
J. W. Dickson
A. Donaldson
S. F. Harrison, Jr.
D. Miller
B. K. Nutter
T. Patel
M. Poehlmann
D. E. Tompkins
Z. Wang
J. A. West
A. Wilson
B. Calderon, *Alternate*
H. Aguilar, *Contributing Member*
R. W. Barnes, *Contributing Member*
R. D. Danzy, *Contributing Member*
M. Elias, *Contributing Member*
D. Felix, *Contributing Member*
A. Frigerio, *Contributing Member*
A. Hassan, *Contributing Member*
P. K. Lam, *Contributing Member*
J. M. Levy, *Contributing Member*
M. Mengon, *Contributing Member*
J. Mize, *Contributing Member*
M. Mullavey, *Contributing Member*
S. K. Parimi, *Contributing Member*
J. Phillips, *Contributing Member*
R. Raman, *Contributing Member*
M. Reddy, *Contributing Member*
K. Shores, *Contributing Member*
D. E. Tezzo, *Contributing Member*

Executive Committee (BPV XIII)

J. P. Glaspie, *Chair*
C. E. O'Brien, *Staff Secretary*
J. F. Ball
D. B. DeMichael
A. Donaldson
D. Miller
B. K. Nutter
J. A. West

Subgroup on Design and Materials (BPV XIII)

D. Miller, *Chair*
C. E. Beair
A. Biesecker
W. E. Chapin
J. L. Freiler
B. Joergensen
V. Kalyanasundaram
B. J. Mollitor
B. Mruk
T. Patel
A. C. Ramirez
G. Ramirez
J. A. West
A. Williams
D. J. Azukas, *Contributing Member*
R. D. Danzy, *Contributing Member*
A. Hassan, *Contributing Member*
R. Miyata, *Contributing Member*
M. Mullavey, *Contributing Member*
S. K. Parimi, *Contributing Member*
K. Shores, *Contributing Member*

Subgroup on General Requirements (BPV XIII)

A. Donaldson, *Chair*
D. J. Azukas
J. F. Ball
M. Z. Brown
J. Burgess
D. B. DeMichael
M. Elias
T. M. Fabiani
S. T. French
J. Gillham
J. P. Glaspie
R. Klimas, Jr.
Z. E. Kumana
P. K. Lam
J. M. Levy
K. R. May
J. Mize
L. Moedinger
M. Mullavey
J. Phillips
B. F. Pittel
M. Poehlmann
K. Shores
D. E. Tezzo
D. E. Tompkins
J. F. White
B. Calderon, *Contributing Member*
P. Chavdarov, *Contributing Member*
J. L. Freiler, *Contributing Member*
G. D. Goodson, *Contributing Member*
C. Haldiman, *Contributing Member*
B. Joergensen, *Contributing Member*
C. Lasarte, *Contributing Member*
M. Mengon, *Contributing Member*
D. E. Miller, *Contributing Member*
R. Miyata, *Contributing Member*
B. Mruk, *Contributing Member*
R. Raman, *Contributing Member*
M. Reddy, *Contributing Member*

Subgroup on Nuclear (BPV XIII)

J. F. Ball, *Chair*
J. W. Dickson
S. Jones
R. Krithivasan
K. R. May
D. Miller
T. Patel
K. Shores
I. H. Tseng
J. Yu
N. J. Hansing, *Alternate*
B. J. Yonsky, *Alternate*
S. T. French, *Contributing Member*
D. B. Ross, *Contributing Member*

Subgroup on Testing (BPV XIII)

B. K. Nutter, *Chair*
T. P. Beirne
B. Calderon
V. Chicola
J. W. Dickson
B. Engman
R. J. Garnett
R. Houk
D. T. Kelley
R. Lack
M. Mengon
C. Sharpe
J. R. Thomas
Z. Wang
A. Wilson
S. Alessandro, *Contributing Member*
J. Britt, *Contributing Member*
W. E. Chapin, *Contributing Member*
J. Cockerham, *Contributing Member*
R. Miyata, *Contributing Member*
J. Mize, *Contributing Member*
M. Mullavey, *Contributing Member*
R. Raman, *Contributing Member*
A. C. Ramirez, *Contributing Member*
G. Ramirez, *Contributing Member*
K. Shores, *Contributing Member*

Copyright ASME International (BPVC)

COMMITTEE ON BOILER AND PRESSURE VESSEL CONFORMITY ASSESSMENT (CBPVCA)

R. V. Wielgoszinski, *Chair*
G. Scribner, *Vice Chair*
G. Moino, *Staff Secretary*
P. Murray, *Staff Secretary*
J. P. Chicoine
D. C. Cook
P. D. Edwards
T. E. Hansen
B. L. Krasiun
P. F. Martin
L. E. McDonald
D. Miller
I. Powell
D. E. Tuttle
R. Uebel
E. A. Whittle
P. Williams
T. P. Beirne, *Alternate*
M. Blankinship, *Alternate*
J. W. Dickson, *Alternate*
J. M. Downs, *Alternate*
B. J. Hackett, *Alternate*
W. Hibdon, *Alternate*
Y.-S. Kim, *Alternate*
B. Morelock, *Alternate*
M. Poehlmann, *Alternate*
R. Rockwood, *Alternate*
L. Skarin, *Alternate*
R. D. Troutt, *Alternate*
B. C. Turczynski, *Alternate*
S. V. Voorhees, *Alternate*
D. Cheetham, *Contributing Member*
A. J. Spencer, *Honorary Member*

COMMITTEE ON NUCLEAR CERTIFICATION (CNC)

R. R. Stevenson, *Chair*
J. DeKleine, *Vice Chair*
L. Powers, *Staff Secretary*
S. Andrews
G. Gobbi
S. M. Goodwin
J. W. Highlands
K. A. Huber
K. A. Kavanagh
J. C. Krane
M. A. Lockwood
L. M. Plante
T. E. Quaka
G. Szabatura
C. Turylo
D. M. Vickery
E. A. Whittle
C. S. Withers
J. Ball, *Alternate*
P. J. Coco, *Alternate*
N. DeSantis, *Alternate*
C. Dinic, *Alternate*
P. D. Edwards, *Alternate*
D. P. Gobbi, *Alternate*
K. M. Hottle, *Alternate*
P. Krane, *Alternate*
M. Martin, *Alternate*
D. Nenstiel, *Alternate*
M. Paris, *Alternate*
E. L. Pleins, *Alternate*
P. F. Prescott, *Alternate*
A. Torosyan, *Alternate*
S. V. Voorhees, *Alternate*
M. Wilson, *Alternate*
S. Yang, *Alternate*
S. F. Harrison, Jr., *Contributing Member*

Copyright ASME International (BPVC)

INTRODUCTION (19)

1 GENERAL

The use of fiber-reinforced plastics for the manufacture of pressure vessels presents unique materials considerations in the design, fabrication, and testing of these vessels. Metallic vessels, being made from materials which are normally isotropic and ductile, are designed by using well-established allowable stresses based on measured tensile and ductility properties. In contrast, fiber-reinforced plastics are usually anisotropic and the physical properties are dependent upon the fabrication process, the placement and orientation of the reinforcement, and the resin matrix. It is the purpose of this Introduction to describe in a general way the criteria that were used in preparing Section X, Fiber-Reinforced Plastic Pressure Vessels. A list of standards referenced in this Section is provided in Table 1.1.

2 MATERIALS

It is not possible to fabricate a reinforced plastic pressure vessel of a single basic material for which there is an ASTM specification. The vessel parts are made up of various basic materials, such as fiber reinforcement and resin, which are joined in the presence of a catalyst to create a composite material that is formed into a vessel or vessel part by a specified process. The composite material will often have directional properties which shall be considered in design. General specifications for the basic materials (fiber reinforcement and resin) are stated, as are requirements for determination of elastic properties for the composite material (laminate) produced. Elastic properties of specific laminates used in vessel fabrication are required when mandatory rules are used for vessel design. Metallic materials, when used in conjunction with reinforced fiber laminates, are required to meet ASME Boiler and Pressure Vessel Code specifications, Section VIII, Division 1. That Section must be used for the design, fabrication, quality control, and inspection of such metallic parts. However, for hydrostatic leakage testing, these metallic materials that complete the vessel are required to meet Section X requirements.

3 DESIGN

3.1 GENERAL

3.1.1 Adequacy of specific designs shall be qualified by one of the following methods:[1]

(a) Class I Design — qualification of a vessel design through the pressure testing of a prototype.

(b) Class II Design — mandatory design rules and acceptable testing by nondestructive methods.

(c) Class III Design — qualification of a vessel design through the pressure testing of a prototype, other specified tests of prototypes, mandatory design rules and acceptance testing by nondestructive methods.

3.1.2 Class I designs based on the qualification of a prototype vessel require that the minimum qualification pressure of the prototype be at least six[2] times the design pressure. The maximum design pressure is limited to 150 psi (1 MPa) for bag-molded, centrifugally cast, and contact-molded vessels; 1,500 psi (10 MPa) for filament-wound vessels; and 3,000 psi (20 MPa) for filament-wound vessels with polar boss openings.

3.1.3 Class II designs based on mandatory design rules and acceptance testing must comply with Article RD-11 and Article RT-6. The maximum design pressure allowed under this procedure shall be as specified in RD-1120.

3.1.4 Class III designs include the qualification of a prototype with the minimum qualification pressure of the prototype to be at 2.25 times the design pressure for carbon fiber vessels, and 3.5 times the design pressure for glass fiber vessels. Hybrid designs using more than one type of fiber are covered in 8-400.7. The maximum design pressure is limited to 15,000 psi (103 MPa). The minimum design pressure shall be not less than 3,000 psi (20.7 MPa).

[1] These three methods shall not be intermixed.

[2] An exception to this six times factor is applicable to vessels per (Filament Winding — Polar Boss Openings Only).

Copyright ASME International (BPVC)

(19)

Table 1.1
Referenced Standards in This Section

Title	Number
Cast Iron Pipe Flanges and Flanged Fittings	ASME B16.1
Pipe Flanges and Flanged Fittings	ASME B16.5
Plain Washers	ASME B18.22.1
Conformity Assessment Requirements	ASME CA-1
Standard Test Method for Kinematic Viscosity and Opaque Liquids (the Calculation of Dynamic Viscosity)	ASTM D445
Standard Test Method for Tensile Properties of Plastics	ASTM D638
Standard Test Method for Compressive Properties of Rigid Plastics	ASTM D695
Standard Test Methods for Density and Specific Gravity (Relative Density) of Plastics by Displacement	ASTM D792
Standard Test Methods for Sampling and Testing Plasticizers Used in Plastics	ASTM D1045
Standard Test Methods for Epoxy Content of Epoxy Resins	ASTM D1652
Standard Test Method for Tensile Properties of Glass Strands, Yarns, and Rovings Used in Reinforced Plastics	ASTM D2343
Standard Test Method for Short-Beam Strength of Polymer Matrix Composite Materials and Their Laminates	ASTM D2344
Standard Test Method for Epoxy Resins and Related Components	ASTM D2393
Standard Test Method for Gel Time and Peak Exothermic Temperature of Reacting Thermosetting Resins	ASTM D2471
Standard Test Method for Indentation Hardness of Rigid Plastics by Means of Barcol Impressor	ASTM D2583
Standard Test Method for Ignition Loss of Cured Reinforced Resins	ASTM D2584
Standard Practice for Obtaining Hydrostatic or Pressure Design Basis for “Fiberglass” (Glass-Fiber-Reinforced Thermosetting-Resin) Pipe and Fittings	ASTM D2992
Standard Test Method for Volatile Matter (Including Water) of Vinyl Chloride Resins	ASTM D3030
Standard Test Method for Tensile Properties of Polymer Matrix Composite Materials	ASTM D3039
Standard Test Method for Constituent Content of Composite Materials	ASTM D3171
Standard Test Method for Compressive Properties for Polymer Matrix Composite Materials With Unsupported Gage Section by Shear Loading	ASTM D3410
Standard Test Method for In-Plane Shear Strength of Reinforced Plastics	ASTM D3846
Standard Test Method for Specific Gravity	ASTM D4052
Standard Specification for Contact-Molded Glass-Fiber-Reinforced Thermoset Resin Corrosion-Resistant Tanks	ASTM D4097
Standard Guide for Testing In-Plane Shear Properties of Polymer Matrix Composite Materials by the Rail Shear Method	ASTM D4255
Standard Test Method for Inplane Shear Properties of Hoop Wound Polymer Matrix Composite Cylinders	ASTM D5448
Standard Test Method for Transverse Compressive Properties of Hoop Wound Polymer Matrix Composite Cylinders	ASTM D5449
Standard Test Method for Transverse Tensile Properties of Hoop Wound Polymer Matrix Composite Cylinders	ASTM D5450
Standard Test Method for Shear Properties of Composite Materials by V-Notched Rail Shear Method	ASTM D7078
Standard Practice for Determining Damage-Based Design for Fiberglass Reinforced Plastic (FRP) Materials Using Acoustic Emission	ASTM E2478
Recommended Practice for Personnel Qualification and Certification in Nondestructive Testing	SNT-TC-1A

GENERAL NOTES:
(a) The most recently approved version of the above referenced standards apply.
(b) Additional standards referenced for Class III vessels are listed in 8-200.4.

Copyright ASME International (BPVC)

3.2 LOW MODULUS CHARACTERISTICS

Fiber-reinforced plastic laminates may have a modulus of elasticity as low as 1.0×10^6 psi (6 900 MPa), compared with that of ferrous materials which may be of the order of 30×10^6 psi (2.1×10^5 MPa). This low modulus characteristic requires careful consideration of vessel profile in order to minimize bending and avoid buckling. Spherical heads or elliptical heads having an ellipse ratio not greater than 2:1 are suggested. Spherical heads are suggested when the material has isotropic properties. Elliptical heads are preferred when the material has anisotropic properties.

3.3 FATIGUE

3.3.1 Like metallic materials, the composite material (laminate) of fiber-reinforced plastic vessels, when stressed at sufficiently low levels, exhibits good fatigue life. However, its low modulus of elasticity provides a higher strain per unit of stress than metals used for metallic vessels.

3.3.2 Section X, therefore, requires that a Class I design that is qualified by testing of a prototype vessel be pressure cycled 100,000 times over a pressure range of atmospheric to the design pressure; after this, the test vessel must withstand a hydrostatic qualification test not less than six times the design pressure. An exception to this 100,000 cycle requirement is applicable to vessels per RG-404.2 (Filament Winding — Polar Boss Openings Only). That classification of vessels is designed for a 5:1 factor of safety which requires cycling from atmospheric to the design pressure for 33,000 cycles; after this, the test vessel must withstand a hydrostatic qualification test not less than five times the design pressure.

3.3.3 Class II vessels qualified using mandatory design rules and acceptance testing are not required to be subjected to the above cyclic and qualification pressure test criteria.

3.3.4 Section X requires that a Class III design qualification include testing of a prototype vessel that is pressure cycled for "N" cycles as prescribed in 8-700.5.4.1 over a pressure range of 10% of design pressure to 100% of design pressure without leakage or rupture.

3.4 CREEP, STRESS-RUPTURE, AND TEMPERATURE EFFECTS

Fiber-reinforced plastic composite material (laminate) is not subject to creep or failure due to low stress-to-rupture characteristics as are some other materials. The material does, however, lose ultimate strength as the temperature is increased and gains strength but becomes more brittle as the temperature is lowered. Its low thermal conductivity and ablative properties are other factors significantly affecting the behavior of this material in the event of fire or other high-temperature environment. The maximum design, operating, and test temperatures of Class I vessels are set as follows:

(a) 150°F (65°C) for design temperatures less than or equal to 150°F (65°C);

(b) 250°F (120°C) or to within 35°F (19°C) of the glass transition temperature (whichever is lower) for design temperatures in excess of 150°F (65°C).

The maximum design, operating, and test temperatures of Class II vessels are limited to an inside wall temperature of 250°F (120°C) or to within 35°F (19°C) of the glass transition temperature of the resin (whichever is lower). The maximum design temperature of Class III vessels shall be 35°F (19°C) below the maximum use temperature of the resin as documented in the Manufacturing Specifications, but in no case shall it exceed 185°F (85°C). The minimum design temperature of Class I, Class II, and Class III vessels shall be −65°F (−54°C) (see RD-112).

3.5 FABRICATION

3.5.1 Many processes are used in the fabrication of fiber-reinforced composite materials (laminates). Class I vessels are limited to four processes, namely, filament winding, bag molding, contact molding, and centrifugal casting. Class II vessels are limited to two processes, namely, filament winding and contact molding.

3.5.2 The fabrication of more than one Class I vessel may be required to comply with the requirements for qualifying a design using the prototype vessel[3] method. Once a specific design has been qualified, the quality of subsequent vessels of the same dimension and design is to be assured by carefully controlled fabrication procedures and rigid Quality Control Programs.

3.5.3 Every Class II vessel must be acceptance tested as specified in Article RT-6. Such tests must be documented as having met the acceptance criteria of Article RT-6 and shall become part of the Fabricator's Design Report.

3.5.4 Class III vessels are limited to filament-wound construction with polar loss openings.

[3] Prototype vessels used to qualify a design shall not be stamped with the Certification Mark.

Copyright ASME International (BPVC)

3.6 INSPECTION

3.6.1 The general philosophy of Section VIII, Division 1, regarding inspection during fabrication is continued in this Section. Familiarity with the laminate production processes and the nature of vessel imperfections is required of the Inspector. Reliance is placed upon careful auditing of the Fabricator's Quality Control Program, close visual inspection of completed vessels by both Fabricator personnel and the Inspector, and acceptance testing where required by this Section.

3.6.2 This Section requires that all laminate and secondary bonding work be without use of pigments, fillers, or resin putty mixtures except as permitted by the Procedure Specification used in fabricating the vessel or vessel part.

3.7 LINERS

Liners may be used in Section X vessels as a barrier between the laminate and the vessel contents. Such liners shall not be considered part of the structural component of the vessel.

3.8 UNITS

3.8.1 Either U.S. Customary, SI, or any local customary units may be used to demonstrate compliance with all requirements of this Edition (e.g., materials, design, fabrication, examination, inspection, testing, certification, and overpressure protection).

3.8.2 In general, it is expected that a single system of units shall be used for all aspects of design except where unfeasible or impractical. When components are manufactured at different locations where local customary units are different than those used for the general design, the local units may be used for the design and documentation of that component. Similarly, for proprietary components or those uniquely associated with a system of units different than that used for the general design, the alternate units may be used for the design and documentation of that component.

3.8.3 For any single equation, all variables shall be expressed in a single system of units. When separate equations are provided for U.S. Customary units and SI units, those equations must be executed using variables in the units associated with the specific equation. Data expressed in other units shall be converted to U.S. Customary units or SI units for use in these equations. The result obtained from execution of these equations may be converted to other units.

3.8.4 Production, measurement and test equipment, drawings, welding procedure specifications, welding procedure and performance qualifications, and other fabrication documents may be in U.S. Customary, SI, or local customary units in accordance with the fabricator's practice. When values shown in calculations and analysis, fabrication documents, or measurement and test equipment are in different units, any conversions necessary for verification of Code compliance and to ensure that dimensional consistency is maintained, shall be in accordance with the following:

(a) Conversion factors shall be accurate to at least four significant figures.

(b) The results of conversions of units shall be expressed to a minimum of three significant figures.

3.8.5 Material that has been manufactured and certified to either the U.S. Customary or SI material specification (e.g., SA-516M) may be used regardless of the unit system used in design. Standard fittings (e.g., flanges, elbows, etc.) that have been certified to either U.S. Customary units or SI units may be used regardless of the units system used in design.

3.8.6 Conversion of units, using the precision specified in para. 20, shall be performed to assure that dimensional consistency is maintained. Conversion factors between U.S. Customary units and SI units may be found in the Nonmandatory Appendix, Guidance for the Use of U.S. Customary and SI units in the ASME Boiler and Pressure Vessel Code. Whenever local customary units are used, the Manufacturer shall provide the source of the conversion factors which shall be subject to verification and acceptance by the Authorized Inspector or Certified Individual.

3.8.7 All entries on a Manufacturer's Data Report and data for Code required nameplate marking shall be in units consistent with the fabrication drawings for the component using U.S. Customary, SI, or local customary units. It is acceptable to show alternate units parenthetically. Users of this Code are cautioned that the receiving Jurisdiction should be contacted to ensure the units are acceptable.

Copyright ASME International (BPVC)

SUMMARY OF CHANGES

Errata to the BPV Code may be posted on the ASME website to provide corrections to incorrectly published items, or to correct typographical or grammatical errors in the BPV Code. Such Errata shall be used on the date posted.

Information regarding Special Notices and Errata is published by ASME at http://go.asme.org/BPVCerrata.

Changes given below are identified on the pages by a margin note, **(19)**, placed next to the affected area.

The Record Numbers listed below are explained in more detail in "List of Changes in Record Number Order" following this Summary of Changes.

Page	*Location*	*Change (Record Number)*
xv	List of Sections	Updated
xvii	Foreword	Penultimate paragraph revised
xix	Statement of Policy on the Use of the ASME Single Certification Mark and Code Authorization in Advertising	Revised
xix	Statement of Policy on the Use of ASME Marking to Identify Manufactured Items	Revised
xx	Submittal of Technical Inquiries to the Boiler and Pressure Vessel Standards Committees	In para. 4, third sentence revised
xxiii	Personnel	Updated
xlv	Introduction	(1) In Table 1.1, third entry from bottom added *(17-2352)* (2) Paragraph 3.3.4 revised *(18-827)*
5	RD-321.2	(1) In subpara. (b), fifth sentence added *(17-2956)* (2) Subparagraph (e)(8) revised *(17-2956)*
10	RM-153	Revised *(17-2956)*
34	RD-1163	Last sentence revised *(17-2956)*
34	RD-1163.1	In first paragraph, sixth sentence added *(17-2956)*
42	RD-1176.3(i)	Second equation revised *(18-1922)*
48	RD-1180.2	Subparagraph (c) revised *(17-2956)*
56	RD-1230	In paragraph following eq. (3), second sentence revised *(17-2956)*
65	RF-531	Revised *(16-650)*
89	RT-510	In subpara. (a), first sentence revised *(17-2833)*
92	RT-703.5	Cross-references to ASTM revised *(17-2352)*
94	RT-810	ASTM D7078 added *(17-2352)*
105	1-100	In first paragraph, last sentence revised *(18-2421)*
110	Mandatory Appendix 4	(1) Definitions of *accelerator*, *aramid fiber*, *balanced laminate*, *curing agent*, *fiber*, *geodesic isotensoid contour*, *graphite filament*, *hybrid*, *inhibitor*, *isotropic laminate*, *liner*, *NOL ring*, *planar winding*, *strength ratio*, and *winding pattern* revised *(16-650, 18-405)* (2) Definitions of *ASTM ring*, *carbon filament*, *E-CR glass*, *loop order*, and *quasi-isotropic* added *(18-405)*

Copyright ASME International (BPVC)

Page	*Location*	*Change*
		(3) Definition of *planar helix winding* deleted *(18-405)*
126	Mandatory Appendix 8	Title revised *(18-1841)*
126	8-100.2	Second line revised *(18-1841)*
126	8-100.8	Added *(18-1841)*
127	8-200.2	Revised *(16-1873)*
127	8-300.1	Subparagraph (c) revised *(18-1841)*
127	8-300.3	In subpara. (b)(2), penultimate line editorially revised *(16-1873)*
129	8-300.6.1	Second sentence revised *(18-1841)*
129	8-400.1	First and second paragraphs revised *(18-1841, 18-1843)*
132	8-600.2.7.1	(1) First paragraph revised *(18-404)*
		(2) In last paragraph, second sentence revised *(16-1873)*
133	8-600.2.7.2	Subparagraphs (a) and (b) revised *(18-404, 16-1873)*
134	8-600.2.7.3.2	Revised *(18-404)*
135	8-600.2.7.5	In second paragraph, second sentence revised *(16-1873)*
136	8-700.2.1	In subpara. (d), first line revised *(18-1841)*
137	Table 8-700.2.1-1	For 8-700.5.5, entry under Nozzle deleted *(18-1842)*
138	8-700.5.3.1	Revised *(18-1845)*
138	8-700.5.4.1	First paragraph revised *(18-827, 18-1844)*
138	8-700.5.4.3	Subparagraph (b) and designator “(a)” deleted *(18-827)*
139	8-700.5.7.2	First paragraph designated as “(a)” and subpara. (b) added *(18-1841)*
139	8-700.5.7.4	Revised *(18-1841)*
140	8-700.5.11.1	Subparagraph (h) revised *(18-1841)*
166	AA-200.1	In nomenclature, definitions of S_a and S_H revised *(16-2859)*
193	AD-400	First paragraph revised *(17-2956)*
212	AH-100	Revised *(17-334)*

--`,```,,,,,````,`,``,,`,`,`-`-`,,`,`,`,`---

Copyright ASME International (BPVC)

LIST OF CHANGES IN RECORD NUMBER ORDER

Record Number	Change
16-650	Revised RF-531, Liner Material, to include metallic and elastomeric materials.
	Revised Mandatory Appendix 4, Glossary of Terms, Liner, to include metallic and elastomeric materials.
16-1873	Corrected 8-200.2 to refer to the rules of the National Board of Boiler and Pressure Vessels Inspectors. The term “inspector(s)” was replaced by “Inspector” or “technician(s)” as appropriate.
16-2859	Added the allowable design stress of helix-oriented filaments when using the one-fifth design factor per RG-404-2 and RT-223.5.
	Added the allowable design stress of hoop-oriented filaments when using the one-fifth design factor per RG-404-2 and RT-223.5.
17-334	Revised AH-100.
17-2352	Revised Table 1.1 of Introduction.
	Revised RT-703.5 and RT-810.
17-2833	Added wording similar to UG-102(a) to RT-510(a).
17-2956	Revised RM-153, RG-321.2(b), RG-321.2(e)(8), AD-400, RD-1163, RD-1163.1, RD-1180.2(c), RD-1230.
18-404	Revised 8-600.2.7.1 through 8-600.2.7.3.
18-405	Revised definition of *liner* in Mandatory Appendix 4.
18-827	Revised 8-700.5.4.1.
	Revised para. 3.3.4 of Introduction.
18-1841	Revised Mandatory Appendix 8.
18-1842	Revised Table 8-700.2.1-1.
18-1843	Revised 8-400.
18-1844	Revised 8-700.5.4.1.
18-1845	Revised 8-700.5.3.1.
18-1922	Revised RD-1176.3(i).
18-2421	Revised 1-100.

Copyright ASME International (BPVC)

CROSS-REFERENCING AND STYLISTIC CHANGES IN THE BOILER AND PRESSURE VESSEL CODE

There have been structural and stylistic changes to BPVC, starting with the 2011 Addenda, that should be noted to aid navigating the contents. The following is an overview of the changes:

Subparagraph Breakdowns/Nested Lists Hierarchy

- First-level breakdowns are designated as (a), (b), (c), etc., as in the past.
- Second-level breakdowns are designated as (1), (2), (3), etc., as in the past.
- Third-level breakdowns are now designated as (-a), (-b), (-c), etc.
- Fourth-level breakdowns are now designated as (-1), (-2), (-3), etc.
- Fifth-level breakdowns are now designated as (+a), (+b), (+c), etc.
- Sixth-level breakdowns are now designated as (+1), (+2), etc.

Footnotes

With the exception of those included in the front matter (roman-numbered pages), all footnotes are treated as endnotes. The endnotes are referenced in numeric order and appear at the end of each BPVC section/subsection.

Submittal of Technical Inquiries to the Boiler and Pressure Vessel Standards Committees

Submittal of Technical Inquiries to the Boiler and Pressure Vessel Standards Committees has been moved to the front matter. This information now appears in all Boiler Code Sections (except for Code Case books).

Cross-References

It is our intention to establish cross-reference link functionality in the current edition and moving forward. To facilitate this, cross-reference style has changed. Cross-references within a subsection or subarticle will not include the designator/identifier of that subsection/subarticle. Examples follow:

- *(Sub-)Paragraph Cross-References.* The cross-references to subparagraph breakdowns will follow the hierarchy of the designators under which the breakdown appears.
  - If subparagraph (-a) appears in X.1(c)(1) and is referenced in X.1(c)(1), it will be referenced as (-a).
  - If subparagraph (-a) appears in X.1(c)(1) but is referenced in X.1(c)(2), it will be referenced as (1)(-a).
  - If subparagraph (-a) appears in X.1(c)(1) but is referenced in X.1(e)(1), it will be referenced as (c)(1)(-a).
  - If subparagraph (-a) appears in X.1(c)(1) but is referenced in X.2(c)(2), it will be referenced as X.1(c)(1)(-a).
- *Equation Cross-References.* The cross-references to equations will follow the same logic. For example, if eq. (1) appears in X.1(a)(1) but is referenced in X.1(b), it will be referenced as eq. (a)(1)(1). If eq. (1) appears in X.1(a)(1) but is referenced in a different subsection/subarticle/paragraph, it will be referenced as eq. X.1(a)(1)(1).

Copyright ASME International (BPVC)

PART RG
GENERAL REQUIREMENTS

ARTICLE RG-1
SCOPE AND JURISDICTION

RG-100 SCOPE

(a) Section X establishes the requirements for the fabrication of fiber-reinforced thermosetting plastic pressure vessels for general service, sets limitations on the permissible service conditions, and defines the types of vessels to which these rules are not applicable.

(b) To assure that vessels fabricated according to these rules will be capable of safely withstanding the operating conditions specified by the Design Specification, this Section:

(1) gives minimum requirements for the materials of fabrication;

(2) specifies test procedures for determining laminate mechanical properties;

(3) Defines three methods of design qualification:

(-a) Class I Design — nondestructive qualification test

(-b) Class II Design — mandatory design rules and acceptance testing by nondestructive evaluation (NDE) methods

(-c) Class III Design — qualification of a vessel design through the destructive test of a prototype

(4) suggests nonmandatory design procedures for Class I vessels;

(5) provides mandatory design procedures and acceptance testing for Class II vessels;

(6) defines the general methods of fabrication which may be used;

(7) limits the types of end closures, connections, and attachments which may be employed and the means used to join them to the vessels;

(8) stipulates the procedures to be used in proving that prototype vessels will withstand specified operating and test conditions;

(9) establishes rules under which fabricating procedures used for fabricating Class I and Class III prototype and production vessels are qualified, and defines what deviations from such procedures necessitate requalification;

(10) sets forth requirements to assure that no essential variation in qualified fabrication procedures has occurred;

(11) establishes rules for acceptance testing, inspection, and reporting;

(12) gives requirements for stamping and marking.

(c) For vessels fabricated in accordance with these rules, the provisions of Section X shall apply over any other sections of the Code. When metallic components are part of fiber-reinforced plastic vessels, they shall meet the provisions of Section VIII, Division 1.

(d) The fabricator shall establish the effective Code edition, addenda and Code Cases for pressure vessels and replacement parts in accordance with Mandatory Appendix 9.

RG-110 APPLICATION LIMITATIONS

RG-111 DESIGN PRESSURE

The internal design pressure of vessels fabricated under this Section shall be limited as follows:

(a) Class I vessels shall not exceed 150 psi (1 MPa) for bag-molded, centrifugally cast, and contact-molded vessels; 1,500 psi (10 MPa) for filament-wound vessels and 3,000 psi (20 MPa) for filament-wound vessels with polar boss openings.

(b) Class II vessels shall not exceed the limits specified in RD-1120.

(c) Class III vessels shall not exceed 15,000 psi (103.4 MPa) for filament-wound vessels with polar boss openings.

RG-112 DESIGN TEMPERATURE

The design temperature of vessels fabricated under this Section shall not exceed the lower of (a) or (b).

(a) 250°F (120°C) for Class I and Class II, and 185°F (85°C) for Class III

(b) 35°F (19°C) below the maximum use temperature (see RM-121) of the resin, nor be less than −65°F (−54°C) (see RD-112)

Copyright ASME International (BPVC)

RG-113 POTABLE WATER — SECTION IV APPLICATIONS ONLY

Vessels fabricated under Section X intended for Section IV use are limited to applications permitted therein. The vessels are limited to internal pressure only with a maximum allowable working pressure of 160 psig [1.1 MPa (gage)]. The maximum allowable temperature used shall be 210°F (99°C). The provisions of this paragraph only apply to vessels that are intended for use under Section IV.

RG-114 LETHAL FLUIDS[1]

Vessels fabricated under this Section shall not be used to store, handle, transport, or process lethal fluids.

RG-120 JURISDICTION OF SECTION X

The jurisdiction of this Section is intended to include only the vessel and integral communicating chambers and to terminate at the points defined in the following subparagraphs (a) and (b).

(a) Where external piping is connected to the vessel, the jurisdiction shall terminate at:

(1) the face of the first flange in bolted flange connections;

(2) the first threaded joint in that type of connection;

(3) the first circumferential adhesive-bonded joint in that type of connection.

(b) Where lugs, skirts, or other supporting structures are joined directly to a vessel, the jurisdiction shall terminate at the first joint or connection beyond the vessel, but shall include the attachment of such supporting structures to the vessel.

RG-121 CLASSES OF VESSELS OUTSIDE THE JURISDICTION OF THIS SECTION

The following classes of fiber-reinforced plastic pressure vessels are exempted from the Scope of this Section; however, any pressure vessel within these classes which meets all applicable requirements of this Section may be stamped with the Certification Mark and RP Designator:

(a) pressure containers which are integral parts of components of rotating or reciprocating mechanical devices, such as pumps, compressors, turbines, generators, engines, and hydraulic or pneumatic cylinders, where the primary design considerations and/or stresses are derived from the functional requirements of the device;

(b) piping systems whose primary function is the transport of fluids from one location to another within a system of which it is an integral part;

(c) piping components, such as pipe, flanges, bolting, gaskets, valves, expansion joints, fittings, and pressure containing parts of other components, such as strainers, and devices which serve such purposes as mixing, separating, snubbing, distributing and metering, or controlling flow, provided that the pressure containing parts of such components are generally recognized as piping components for accessories;

(d) vessels which have any part of the shell, heads, nozzles, fittings, or support laminates heated above the temperature limits of RG-112;

(e) vessels having neither an internal nor an external operating pressure exceeding 15 psi (100 kPa) with no limitation on size;

(f) vessels having an inside diameter, or maximum internal cross-sectional dimension, not exceeding 6 in. (152 mm) with no limitation on the length of vessel or pressure;

(g) pressure vessels for human occupancy.[2]

Copyright ASME International (BPVC)

ARTICLE RG-2
ORGANIZATION

RG-200 ORGANIZATION OF THIS SECTION

RG-201 PARTS

This Section is divided into nine major parts:

(a) Part RG, General Requirements, applying to duties and responsibilities and methods of fabrication;

(b) Part RM, Material Requirements, setting forth rules governing materials applicable to all methods of fabrication;

(c) Part RD, Design Requirements, providing design requirements for all methods of fabrication;

(d) Part RF, Fabrication Requirements, giving rules for permissible methods of fabrication;

(e) Part RQ, Qualification Requirements, used in carrying out the methods of fabrication;

(f) Part RR, Pressure Relief Devices, giving rules for pressure relief devices;

(g) Part RT, Rules Governing Testing, establishing the following:

(1) methods for qualifying designs and procedure specifications, for quality control testing, and for production testing;

(2) methods for determining lamina strength and elastic properties for design criteria and acceptance testing of Class II vessels;

(h) Part RI, Inspection Requirements, setting forth minimum inspection requirements;

(i) Part RS, Marking, Stamping, and Reports, setting forth marking, stamping, and reporting requirements.

RG-202 ARTICLES, PARAGRAPHS, AND SUBPARAGRAPHS

(a) The Parts of this Section are divided into Articles. Each Article is given a number and a title, (e.g., Part RG, Article RG-3, Responsibilities and Duties).

(b) Articles are divided into paragraphs, which are a three- or occasionally a four-digit number, the first of which corresponds to the Article number; thus under Article RG-3 we find paragraph RG-310, User's Responsibilities.

(c) Paragraphs are divided into subparagraphs. Major subdivisions of paragraphs are designated by suffixing to the above-mentioned three- or four-digit numbers a decimal point followed by a digit or digits. Where necessary, divisions of subparagraphs are indicated by letters and further subdivisions by numbers in parentheses.

(d) Minor subdivisions of paragraphs are indicated by letters instead of decimals followed by digits.

(e) A reference in one of the paragraphs of this Section to another such paragraph includes all of the applicable rules in the referenced paragraph and its subdivisions, unless otherwise stipulated.

Copyright ASME International (BPVC)

ARTICLE RG-3
RESPONSIBILITIES AND DUTIES

RG-300 RESPONSIBILITIES AND DUTIES

The various parties involved in specifying, fabricating, and inspecting vessels under this Section have definite responsibilities or duties in meeting Code requirements. The responsibilities and duties set forth hereinafter relate only to Code compliance and are not to be construed as involving contractual relationships or legal liabilities.

RG-310 USER'S RESPONSIBILITIES — DESIGN SPECIFICATION

The User, or an agent[3] acting in his behalf, requiring that a vessel be designed, fabricated, tested, and certified to be a vessel complying with this Section, shall provide or cause to be provided for such a vessel information as to operating conditions, including intended use and material compatibility with the contents, in such detail as will provide the basis for design, material selection, fabrication, and inspection in accordance with this Section. This information shall be designated hereinafter as the Design Specification.

RG-320 FABRICATOR'S RESPONSIBILITIES

The structural integrity of a vessel or part thereof, including the capability to contain pressure, and its compliance with the Design Report (see RG-321), are the responsibility of the Fabricator. The Fabricator, completing any vessel to be marked with the Certification Mark with RP Designator, has the responsibility of complying with all the requirements of this Section and, through proper certification, of assuring that any work done by others also complies with all the requirements of this Section.

When such parts are fabricated by an organization other than the Fabricator responsible for the completed vessel, they shall be fabricated by an organization having a valid Certificate of Authorization from ASME and be reported to the Fabricator of the completed vessel on Partial Data Report Form RP-2, which shall be certified by both the parts fabricator and the Inspector.

RG-321 FABRICATOR'S DESIGN REPORT

RG-321.1 Class I Vessel Designs. Class I vessel designs shall comply as follows:

(a) As a part of the Fabricator's responsibility for the structural integrity of a Class I vessel, and vessel parts fabricated by others as permitted in (g)(5) and RS-301, and its capability to contain pressure, the Fabricator or the design agent responsible to him shall make Design Calculations of the type suggested in Nonmandatory Appendix AA. Such Design Calculations shall constitute only a tentative determination that the design, as shown on the drawings, complies with the requirements of this Section for the design conditions set forth in the Design Specification.

(b) For vessels used for potable water, as described in RG-113 (Section IV application), the fabricator's design report shall indicate suitability for potable water use.

(c) It shall be the Fabricator's responsibility to prove that a vessel will safely withstand the service conditions set forth in the Design Specification. The proof shall consist of subjecting one or more prototype vessels to tests, as required by the rules of this Section (see RT-223), and using the procedures established therein. A report of such tests, designated as the Qualification Test Report, shall be prepared and certified by the Fabricator and the Inspector.

Prototype vessels used to qualify a design shall not be stamped with the Certification Mark.

(d) It shall be the Fabricator's responsibility to prepare and qualify a Procedure Specification that shall specify the materials and the procedure employed to fabricate a prototype vessel or vessels used to verify the capability of such vessel or vessels to safely withstand the test and service conditions set forth in the Design Specification. The Procedure Specification shall provide, as a minimum, all the information concerning the fabricating procedure, recorded on the applicable Form Q-106, Form Q-107, Form Q-108, or Form Q-115.

(e) It shall be the Fabricator's responsibility to conduct Quality Control Tests in accordance with the requirements of Article RT-3 and to record the results thereof to permit verification that all other vessels, fabricated in accordance with the qualified Procedure Specification, comply with this Section.

(f) It shall be the Fabricator's responsibility to conduct Production Tests as stipulated in Article RT-4 and to record the results to permit verification that such vessels are in compliance with this Section and are acceptable for marking with the Certification Mark.

Copyright ASME International (BPVC)

(g) It shall be the responsibility of the Fabricator to prepare a Fabricator's Design Report consisting of the following documents:

(1) the Design Specification setting forth the service conditions;

(2) the Design Drawings;

(3) the tentative Design Calculations;

(4) the material manufacturer's specification sheets for resin, fiber reinforcement, promoters, catalyst, and other components used in laminate construction;

(5) a properly certified Form RP-2 for parts of the vessel fabricated by other Fabricators;

(6) the Procedure Specification, providing the fabrication procedures used to fabricate both the prototype vessel(s) and all production vessels to be certified as complying with this Section;

(7) the Qualification Test Report, which provides data that the prototype vessel(s) conforming to the Design Drawings will safely withstand the specified test conditions;

(8) the records of the Quality Control Tests Report, providing the results of the in-process tests used to assure that no essential variations from the requirements of the Procedure Specification occurred;

(9) the Production Test Report of inspections, examinations, and tests performed on each vessel to be marked with the Certification Mark.

The preceding nine documents shall constitute the Fabricator's Design Report. It shall be certified by the Fabricator. It shall be kept on file at the Fabricator's place of business or at a safe depository acceptable to the User and shall be made available to the Inspector for at least 5 yr. When fabrication of specific mass-produced vessels occurs over an indefinite period of time, the Fabricator's Design Report on each specific design shall be kept on file for at least 5 yr after production of such vessels has ceased. Copies of the Design Drawings and Design Calculations shall be furnished to the User or his agent and, when requested, a copy of the Test Report shall also be furnished.

(19) **RG-321.2 Class II Vessel Designs.** Class II vessel designs shall comply as follows:

(a) As part of the Fabricator's responsibility for the structural integrity of the vessel, and vessel parts fabricated by others as permitted in (e)(5) and RS-301, and its ability to contain pressure, the Fabricator of the vessel shall be responsible for Design Calculations as specified in Article RD-11. Such calculations shall constitute the basis for thickness of parts subject to pressure, number of plies, ply orientation, and other fabrication details specified on drawings and other fabrication documents. Such calculations shall be part of the Design Report.

(b) It shall be the Fabricator's responsibility to document the elastic and strength constants of the laminate or laminates used for Design Calculations. The lamina or laminas used for vessel laminate construction shall be the same as the lamina or laminas from which elastic and strength constants were determined and which served as a basis for Design Calculations and laminate analysis. The number of laminas, stacking sequence, and orientation of each lamina shall be the same as used on the laminate analysis for design purposes. Determination of laminate stiffness coefficients shall be in accordance with Article RD-12. The determination of lamina elastic and strength properties shall be in accordance with Article RT-7. As an alternative, the lamina elastic properties may be determined in accordance with Nonmandatory Appendix AK. A report of such test, designated as the Material Property Test Report, shall be part of the Fabricator's Design Report and shall be made available to the Inspector.

(c) It shall be the Fabricator's responsibility to prepare and certify a Procedure Specification that shall specify the materials and fabrication procedures used to fabricate the specified vessel. The Procedure Specification shall provide, as a minimum, all the information required by Form Q-120, which shall verify that the vessel was fabricated according to that specification.

(d) It shall be the Fabricator's responsibility to subject each vessel fabricated under this method to acceptance testing as specified in Article RT-6. A report of such test, designated as the Acceptance Test Report, shall be part of the Fabricator's Design Report and shall be made available to the Inspector.

(e) It shall be the Fabricator's responsibility to prepare and certify a Fabricator's Design Report consisting of the following documents:

(1) the Design Specification setting forth the design conditions;

(2) the Design Drawings including Procedure Specification number;

(3) the Design Calculations;

(4) the material manufacturer's specification sheets for all materials used in lamina testing and laminate fabrication;

(5) a properly certified Form RP-4 for vessel parts fabricated by other Fabricators;

(6) the Procedure Specification to which the vessel was fabricated;

(7) the Acceptance Test results including the acoustic emission report, to be designated as the Acceptance Test Report;

(8) the documentation of the elastic and strength properties of the lamina(s) as specified and determined in Article RT-7 or Nonmandatory Appendix AK, as applicable, to be designated as the Material Property Test Report.

The preceding eight documents shall constitute the Fabricator's Design Report. It shall be certified by the Fabricator. It shall be kept on file at the Fabricator's place of business or at a safe depository acceptable to the User and shall be made available to the Inspector

Copyright ASME International (BPVC)

for at least 10 yr. A copy of the Design Report shall be furnished to the User or his agent.

RG-322 CERTIFICATION OF COMPLIANCE

It is the responsibility of the Fabricator to certify compliance with the rules of this Section by execution of the appropriate Fabricator's Data Report (see Forms RP-1, RP-2, RP-3, and RP-4). (The vessel may be registered and the Data Report filed with the National Board of Boiler and Pressure Vessel Inspectors, 1055 Crupper Avenue, Columbus, Ohio 43229.) See Article RS-3.

RG-323 REQUIREMENTS FOR QUALITY CONTROL

Any Fabricator applying for an official Certification Mark with RP Designator of The American Society of Mechanical Engineers and the Certificate of Authorization shall have, and demonstrate, a Quality Control System which assures that all Code requirements, including material, design, fabrication, examination by the Fabricator, and inspection by the Inspector, will be met. The Quality Control System shall be in accordance with the requirements of Mandatory Appendix 1.

Before issuance or renewal of a Certificate of Authorization for use of the Certification Mark with RP Designator, the Fabricator's facilities and organization are subject to a joint review by a representative of his inspection agency and an individual certified as an ASME designee who is selected by the concerned legal jurisdiction. A written description or checklist of the Quality Control System which explains what documents and what procedures the Fabricator will use to fabricate a Code item shall be available for review. A written report to the Society shall be made jointly by the ASME designee and the inspection agency under contract to the Fabricator to provide inspection services provided by this Section.

The Fabricator may at any time make changes to the Quality Control System concerning the methods of achieving results, subject to acceptance by the Inspector.

The Fabricator shall have in force at all times a valid inspection contract or agreement with an agency employing Inspectors as defined in RI-110. A valid inspection contract or agreement is a written agreement between the Fabricator and the inspection agency in which the terms and conditions of furnishing the inspection service are specified and in which the mutual duties of the Fabricator and the Inspector are stated.

For those areas where there is no jurisdiction or where a jurisdiction does not choose to select an ASME designee to review a vessel or vessel parts Manufacturer's facility, that function shall be performed by an ASME designee selected by ASME.

Where the jurisdiction is the Fabricator's inspection agency, the joint review and joint report shall be made by the jurisdiction and another representative designated by an ASME designee.

RG-330 INSPECTOR'S DUTIES

(a) It is the duty of the Inspector to make the inspections required by the rules of this Section and, in addition, such other inspections and investigations as are necessary in his judgment to verify that:

(1) the User's Design Specification is available;

(2) the Fabricator's Design Report is on file and has been properly executed;

(3) the fabrication conforms to the Design Drawings;

(4) the material and fabrication procedures being used comply with the requirements of the specified Procedure Specification;

(5) the tests stipulated in Part RT substantiate that the Procedure Specification(s) was followed.

(b) It is not the duty of the Inspector to verify the accuracy or completeness of the Design Calculations, but he shall verify that the completed Design Report is on file. He shall certify compliance with the Procedure Specification used for qualifying the design and fabrication of the vessel.

(c) The Inspector shall certify on the Fabricator's Data Report that the requirements of this Section have been met.

Copyright ASME International (BPVC)

ARTICLE RG-4
FABRICATION METHODS

RG-400 FABRICATION METHODS[4]

For purposes of this Section, fiber-reinforced plastic pressure vessels are divided into four methods of fabrication. Class I vessels may be fabricated by any combination of these methods. Class II vessels are restricted to the contact-molding and filament-wound methods of fabrication or a combination of the two.

RG-401 BAG MOLDING5[5]

In this method a pressurized bag is used to compress pre-rolled fiber cylinders and head preforms, which are impregnated with the specified resin system, against an outer heated mold.

RG-402 CENTRIFUGAL CASTING

In this method the sections of the vessel are formed from chopped fiber strands and a resin system in a mandrel, which is spun to produce a laminate, and heated to effect a cure of the resin system.

RG-403 CONTACT MOLDING

In this method cylindrical sections, heads, and/or attachments are fabricated by applying reinforcement fiber and resin to a mandrel or mold. System cure is either at room temperature or elevated temperature using a catalyst–promoter system.

RG-404 FILAMENT WINDING

RG-404.1 General. In this method, continuous filaments of fiber with the specified resin applied are wound in a systematic manner under controlled tension and cured on a mandrel or other supporting structure. Heads and fittings fabricated by contact-molding methods may be attached with suitable adhesive resins and secondary reinforcement with cutting of filaments as required. Opening(s) may be integral wound or with cutting of filaments as required and need not be centered on the axis of rotation.

RG-404.2 Polar Boss Openings Only. In this special case which qualifies for reduced cycle and burst test requirements per RT-223.5, heads shall be integrally wound and satisfy the following criteria:

(a) opening(s) shall be centered on the axis of rotation:

(b) opening(s) shall be a polar boss type, wound in place at the center of revolution;

(c) boss diameter shall not exceed one-half vessel I.D.;

(d) no cutting of filaments is permitted to form the polar boss opening.

Copyright ASME International (BPVC)

PART RM
MATERIAL REQUIREMENTS

ARTICLE RM-1
GENERAL REQUIREMENTS

RM-100 LAMINATE MATERIALS

Fiber-reinforced plastic materials shall hereinafter be designated as laminates.

(a) Laminates, as herein considered, are composite structures consisting of one or more of the following reinforcements embedded in a resin matrix:

(1) glass
(2) carbon or graphite
(3) aramid

(b) The Fabricator shall keep on file the published specifications for all laminate materials used in each vessel fabrication, the material manufacturer's recommendations for storage conditions and shelf life for all laminate materials, and the material manufacturer's certification that each shipment conforms to said specification requirements. This certification shall be part of the Procedure Specification.

RM-110 FIBER SYSTEM

RM-111 GLASS FIBERS

The glass fibers used in any of the fabrication processes permitted by this Section shall be one or more of the following glass compositions:

(a) Type A
(b) Type E
(c) Type S
(d) Type E-CR
(e) Type C

The glass manufacturer shall certify that the fibers conform to the manufacturer's specifications for the product and that the minimum strength and modulus, measured in accordance with ASTM D2343, are not less than 90% of the manufacturer's published minimum values for resin-impregnated strands.

RM-112 CARBON OR GRAPHITE FIBERS

The fiber manufacturer shall certify that the carbon or graphite fibers conform to the manufacturer's specifications for the product and that the minimum strength and modulus, measured in accordance with ASTM D2343, are not less than 90% of the manufacturer's published minimum values for resin-impregnated strands.

RM-113 ARAMID FIBERS

The fiber manufacturer shall certify that the aramid fibers conform to the manufacturer's specifications for the product and that the minimum strength and modulus, measured in accordance with ASTM D2343, are not less than 90% of the manufacturer's published minimum values for resin-impregnated strands.

RM-114 FIBER SURFACE TREATMENT

The surface of glass, carbon, and graphite fiber shall be treated to provide a bond between the fiber and resin matrix. Aramid fibers do not normally require surface treatment.

RM-120 RESIN SYSTEM

The resin system shall consist of an epoxy or polyester/vinyl ester, phenolic, or furan resin plus the resin manufacturer's recommended promoters and curing agents. No filler, pigment, thixotrope, or dye which will interfere with the natural color of the resin shall be used except as permitted by the Procedure Specification. If required by the User, the vessel may be painted following all required inspections and certifications by the Inspector.

RM-121 RESIN SPECIFICATION

The resin materials used in the fabrication of vessels shall be the same as those specified in the Procedure Specification. Each resin shall be traceable by the name of its manufacturer and the trade name or number of that manufacturer.

The resin manufacturer shall supply to the Fabricator a Certificate of Analysis for each resin used. It shall include the following information:

(a) resin identification
(b) batch number(s)

Copyright ASME International (BPVC)

Table RM-120.1
Resin Systems Required Certification by Resin Manufacturer

Resin System	Required Certification
Polyester/Vinyl Ester	
1. Viscosity	ASTM D445 or D2393
2. Acid number	ASTM D1045
3. Specific gravity	Wt. per gallon cup or ASTM D4052
Epoxy	
1. Viscosity	ASTM D445 or D2393
2. Epoxide equivalent	ASTM D1652
3. Specific gravity	Wt. per gallon cup or ASTM D4052
Furan/Phenolic	
1. Viscosity	ASTM D445 or D2393
2. pH	Glass electrode method
3. Total volatiles	Similar to ASTM D3030
4. Specific gravity	Wt. per gallon cup or ASTM D4052

Table RM-120.2
Resin Systems Required Test by Vessel Fabricator

Resin System	Required Test
Polyester/Vinyl Ester	
1. Viscosity	ASTM D445 or D2393
2. Gel time and peak exotherm temperature	ASTM D2471
3. Specific gravity	Mandatory Appendix 5 or ASTM D4052
Epoxy	
1. Viscosity	ASTM D445 or D2393
2. Gel time	ASTM D2471
3. Specific gravity	Mandatory Appendix 5 or ASTM D4052
Furan/Phenolic	
1. Viscosity	ASTM D445 or D2393
2. Gel time	Not Applicable
3. Specific gravity	Mandatory Appendix 5 or ASTM D4052

(c) date of manufacture
(d) shelf life

In addition, the resin manufacturer shall certify for each batch shipped, the value (and the limits stipulated in his specification) of the properties identified in Table RM-120.1.

The Fabricator shall test each batch of resin in accordance with Table RM-120.2 for the appropriate resin to assure that the material characteristics of the resin have not changed from specified values listed in the Procedure Specification.

The values obtained for viscosity and specific gravity for the resin alone shall be within the limits of the manufacturer's specification for that resin and as listed in the Procedure Specification. The resin testing shall be done at first usage and at subsequent intervals of not more than one-fourth of the resin shelf life. The resin shall be maintained in accordance with the manufacturer's recommendation.

The values obtained for gel-time and peak-exotherm temperature shall be for a particular resin/curing system test formulation and temperature, and shall be within the limits listed in the Procedure Specification. The test formulation and temperature shall be representative of the formulations used during vessel fabrication. The tolerance limits for the test formulation (as listed in the Procedure Specification) may be established by either the resin manufacturer or the Fabricator. The tolerance limits shall be established using formulation components having manufacturer-specified material characteristics. The tolerance limits established shall be within a sufficiently narrow range such that test results outside this range would reflect deviations in component material characteristics and alert the Fabricator of possible material irregularities.

In addition, the Fabricator shall establish and document a maximum use temperature for the resin/cure system used. This may be in conjunction with the resin manufacturer or independent laboratory, and may be based on heat distortion temperature or glass transition temperature. The Fabricator shall redocument the maximum use temperature at least every twelve months using current batches of resin and curing agent.

A record of these determinations shall become part of the Fabricator's Quality Control Tests Report and shall be made available to the Inspector.

The data for each batch of resin which is used to fabricate a Class II vessel shall be recorded on the Procedure Specification (Form Q-120) and become part of the Fabricator's Design Report for that vessel.

RM-122 CURING AGENTS

The curing agents used, and curing procedure followed, in the vessel fabrication shall be as specified in the Procedure Specification. Each such curing agent shall be traceable by the manufacturer's name, the manufacturer's designation, and the generic name.

The curing agent and the resin-to-curing-agent ratio used to fabricate vessels shall be recorded and become part of the Quality Control Tests Report specification.

Copyright ASME International (BPVC)

RM-123 LAMINATE CURE

The Fabricator shall determine and document as part of the Procedure Specification and the Quality Control Tests Report that the laminate of each vessel and vessel part is properly cured.

This shall normally be done using the Barcol Test in accordance with ASTM D2583 (see RQ-141 and RT-221). Barcol readings shall be within the tolerance specified by the resin manufacturer as listed in the Procedure Specification. If the resin manufacturer does not provide Barcol specifications (for the resin/curing system used), the Fabricator shall establish Barcol specifications (for the resin/curing system used) that have been documented by independent third party testing that such Barcol readings are indicative of complete resin cure. These shall become part of the Procedure Specification.

If the Fabricator elects not to use the Barcol Test as a measure of proper laminate cure, he shall define and document the method used to assure that proper laminate cure is attained. Such method(s) shall be acceptable to the Inspector. The results thereof shall be part of the Procedure Specification and Quality Control Tests Report recorded in lieu of Barcol Test results on the various forms.

RM-140 USE OF TWO OR MORE MATERIALS SPECIFICATIONS OR PROCESSES IN FABRICATING A CLASS I VESSEL

Two or more Procedure Specifications may be used in fabricating a pressure vessel, provided each Procedure Specification is used in its entirety for the part of the vessel fabricated with that procedure.

RM-150 MECHANICAL PROPERTIES OF LAMINA FOR CLASS II VESSELS

RM-151 EXAMPLES OF LAMINA

For the purposes of this Section, a lamina is defined as a layer or multiple layers of the same material and same orientation. An example of a lamina is a layer of thermoset resin reinforced with chopped strand mat, unidirectional reinforcement, or woven roving.

As a single exception and in the absence of thermal stress, due to existing fabrication methods, alternate layers of chopped strand mat and woven roving may be considered as a lamina.

RM-152 LAMINA SPECIFICATION

The lamina, lamina stacking sequence, and orientation shall be specified in the Procedure Specification.

RM-153 LAMINA PROPERTIES (19)

The lamina strength properties shall be determined in accordance with Article RT-7. The lamina elastic properties shall be determined in accordance with either Article RT-7 or Nonmandatory Appendix AK.

RM-154 LAMINATE ANALYSIS

The lamina properties shall be used to analyze the laminate and determine effective laminate elastic constants in accordance with Article RD-12.

Copyright ASME International (BPVC)

ARTICLE RM-2
MISCELLANEOUS PRESSURE PARTS

RM-200 GENERAL REQUIREMENTS

All portions of the vessel which are under the jurisdiction of this Section and which are fabricated of laminate materials by the Fabricator responsible for the completed vessel, or by other parties, shall conform to all applicable requirements of this Section, including inspection in the shop of the Fabricator. In addition, parts fabricated by parties other than the Fabricator responsible for the completed vessel shall require inspection in the shop of the part fabricator and preparation of a Partial Data Report, Forms RP-2 and RP-4, as applicable.

RM-210 MISCELLANEOUS METALLIC PARTS

RM-211 FOR CLASS I VESSELS

Metallic parts for Class I vessels shall comply with the design, fabrication, quality control, and inspection requirements of Section VIII, Division 1. For hydrostatic leakage testing, metallic parts shall comply with the requirements of RT-450.

RM-212 FOR CLASS II VESSELS

The only metallic parts permitted for Class II vessels shall be removable parts such as multibolted flat flange covers and fasteners. Such parts shall comply with all requirements of Section VIII, Division 1.

Copyright ASME International (BPVC)

PART RD
DESIGN REQUIREMENTS

ARTICLE RD-1
GENERAL

RD-100 SCOPE

Section X provides two methods by which the thickness of vessel parts subject to internal or external pressure may be determined:

(a) Class I Design — qualification and testing of a prototype vessel;

(b) Class II Design — mandatory design rules and acceptance testing.

For Class I vessels, tentative thickness of vessel parts may be determined by the suggested design procedures given in Nonmandatory Appendix AA or by other procedures at the Fabricator's option. Regardless of how the thicknesses of vessel parts are determined, the adequacy of the design of a vessel or vessels to be certified for specified service conditions shall be determined by testing one or more prototype vessels in accordance with the requirements of Article RT-2; all vessels to be so certified shall be constructed in strict accordance with the Procedure Specification utilized in fabricating the prototype vessel or vessels (see Article RQ-1).

For Class II vessels, thickness of vessel parts and other fabrication details shall be determined by procedures specified in Article RD-11. The number of plies and ply orientation shall be as specified in the Procedure Specification, Form Q-120.

RD-101 DESIGN BASIS

(a) The pressure of the fluid at the top of the vessel in its normal operating position, with the laminate temperature for Class I vessels taken at 150°F (65°C) for design temperatures less than or equal to 150°F (65°C) or at the specified design temperature when the design temperature exceeds 150°F (65°C), shall be that on which the design is based. The pressure of the fluid at the top of the vessel in its normal operating position with the laminate temperature as specified in the Design Specification for Class II vessels, shall be that on which the design is based. When applicable, static head shall be included in establishing the design basis. The pressure at the top of the vessel is also the basis for the pressure setting of the pressure relief devices protecting the vessel.

(b) The design shall take into account the maximum difference in fluid pressure which can occur under the conditions of operation specified in the Design Specification (which may include pressure due to static head) between the inside and outside of the vessel at any point or between two chambers of a combination unit.

(c) The design shall take into account all combinations of loadings other than pressure (see RD-120) which may occur, coincident with the specified operating pressure and temperature. For Class I vessels, any additional thickness required to withstand such supplementary loadings shall be added to that required to withstand pressure loading as determined by the requirements of Article RT-2. For Class II vessels, such supplementary loadings shall be included in the Design Calculations.

(d) When liners, whether metallic or nonmetallic, are installed in vessels covered by this Section, no credit shall be given to the strength of the liner in establishing the design pressure. However, the weight of the liner shall be taken into account when determining loadings other than pressure.

Applications that require a liner for corrosion resistance purposes shall be so identified in the Design Specification. Any part of the laminate, such as an inner surface and interior layer composition as described in ASTM D4097, that is intended for corrosion resistance shall be so designated in the Procedure Specification. The thickness of this part of the laminate shall be in addition to that required for pressure and other loading considerations.

RD-110 DEFINITIONS

The terms relating to design used throughout this Section, together with limiting values, are defined in RD-111 through RD-116.

Copyright ASME International (BPVC)

RD-111 DESIGN PRESSURE

The design pressure is the pressure used in the design of the vessel for the purposes of establishing minimum thickness or minimum laminate requirements of the different zones of the vessel. Static head shall be included in the design pressure to determine the minimum thickness or minimum laminate requirements of any specific zone of the vessel.

For Class I vessels, the design pressure at any point under consideration shall not exceed the lower of 150 psi (1 MPa) for bag-molded, centrifugally cast, and contact-molded vessels, and 1,500 psi (10 MPa) for filament-wound vessels, or one-sixth of the bursting pressure determined in accordance with the rules of Article RT-2. The same design pressure at any point under consideration shall not exceed the lower of 3,000 psi (20 MPa) for filament-wound vessels with polar boss openings or one-fifth of the bursting pressure determined in accordance with the rules of Article RT-2.

For Class II vessels, the design pressure shall not exceed the limits specified in RD-1120.

RD-112 DESIGN TEMPERATURE[6]

RD-112.1 Maximum Design Temperature. For Class I vessels, the maximum design temperature, even though a lower operating temperature is specified in the Design Specification, shall be taken as 150°F (65°C) for design temperatures less than or equal to 150°F (65°C), or at the specified design temperature when the design temperature exceeds 150°F (65°C). When the design temperature exceeds 150°F (65°C) on Class I vessels, the specified design temperature shall not exceed 250°F or 35°F (120°C or 19°C) below the maximum use temperature (see RM-121) of the resin, whichever is lower. The hydrostatic qualification pressure tests used to establish the permissible design pressure shall be conducted at that temperature (see Article RT-2). For Class II vessels, the design temperature shall not be less than the interior laminate wall temperature expected under operating conditions for the part considered and shall not exceed, 250°F or 35°F (120°C or 19°C) below the maximum use temperature (see RM-121) of the resin, whichever is lower.

RD-112.2 Minimum Design Temperature. The minimum permissible temperature to which a vessel constructed under this Section may be subjected is −65°F (−54°C) (see RG-112).

RD-113 MAXIMUM ALLOWABLE WORKING PRESSURE

The Maximum Allowable Working Pressure (MAWP) is the maximum pressure at the top of the vessel in its normal operating position at the coincident laminate temperature. The MAWP for a vessel part is the maximum internal or external pressure including static head thereon.

RD-114 QUALIFICATION PRESSURE

The qualification pressure of a Class I vessel is the maximum hydrostatic pressure that has been attained by a prototype vessel and an optional internal bladder (see Mandatory Appendix 4). This pressure serves as proof of the adequacy of the vessel's design and fabrication for the specified service conditions (see RT-223).

RD-115 TEST PRESSURE

The test pressure is that pressure applied at the top of the vessel. For Class I vessels see Article RT-4. For Class II vessels see Article RT-6 on acceptance testing.

RD-116 SAFETY VALVE SETTING

The pressure for which safety or safety relief valves shall be set to open is established in RR-120.

RD-120 LOADINGS

The loadings to be included in designing a vessel shall include any expected combination of loads listed below and stipulated in the Design Specification:

(a) internal and/or external design pressure as defined in RD-111;

(b) impact loads;

(c) weight of the vessel and normal contents under operating and test conditions (this includes additional pressure due to static head of liquids);

(d) superimposed loads, such as other vessels, operating equipment, insulation, corrosion-resistant or erosion-resistant linings, and piping;

(e) live loads due to personnel, which shall be a minimum of 250 lb (1 100 N) in a 4 in. (100 mm) circle on the top of the vessel;

(f) snow and ice loads;

(g) wind loads, and earthquake loads where required;

(h) reactions of supporting lugs, rings, saddles, and other types of supports;

(i) loads due to thermal expansion and thermal gradients.

RD-121 STRESS DUE TO COMBINED LOADINGS

The geometry and wall thickness of a vessel designed under this Section shall be such that:

(a) for Class I vessels, the maximum direct (membrane) stress due to all combinations of loadings listed in RD-120 that are expected to occur simultaneously during normal operation of the vessel shall not exceed one-sixth[7] of the maximum membrane stress value, as determined from the qualification pressure test, and considering any additional membrane stresses caused by other test loadings in addition to the pressure loading (see RD-130 and RQ-132);

Copyright ASME International (BPVC)

(b) for Class II vessels, the stress or strain distributions shall be computed for all combinations of loadings listed in RD-120 and in the Design Specification (RG-310) which are expected to occur simultaneously during normal operation, and for other combinations of loads which could occur during operation or testing of the vessel.

RD-130 DESIGN RESTRICTIONS

Insofar as is reasonably attainable, pressure vessels constructed under the rules of this Section shall be designed to be free of bending and shearing stresses, especially if the vessel is to be subjected to cyclic conditions of loading. Particular care shall be used in selecting the kind of end closure, whether formed head or flat head type, and of nozzle connections for attachment of piping, etc., to avoid or minimize bending and shearing stresses likely to be imposed on the structure by such design details. Class I and Class II methods of design shall not be intermixed.

RD-140 DESIGN ALLOWANCES FOR DEGRADATION

When specified in the Design Specification, the design shall make provision for, but not be limited to, the following:

(a) selection of resin, fiber, fiber surface treatment, and liner materials that are chemically resistant to the specified vessel contents;

(b) fire protection, fire proofing, or fire retardancy;

(c) degradation from ultraviolet exposure;

(d) abrasive conditions.

RD-150 METHODS OF FABRICATION IN COMBINATION

A vessel may be fabricated by a combination of the applicable methods covered by this Section (see RG-400).

RD-151 MATERIALS IN COMBINATION

A vessel may be designed and fabricated of any combination of materials permitted by this Section, including metallic materials covered in Section VIII, Division 1, provided the applicable rules and restrictions for each material and joining are followed (see RM-140, RM-210, and Article RF-7).

NOTE: Because of different moduli of elasticity and thermal coefficients of expansion of plastic and metallic materials, caution shall be exercised in design and fabrication under the provisions of this paragraph in order to avoid difficulties in service under extreme temperature conditions or with unusual restraint of parts such as may occur at points of stress concentration.

RD-152 COMBINATION UNITS

When a vessel unit consists of more than one independent pressure chamber, operating at the same or different pressures or temperatures, each such pressure chamber (vessel) shall be designed and fabricated to withstand the most severe conditions of pressure expected in normal service and as specified in the Design Specification. Only the parts of the chambers which come within the scope of this Section (see RG-100) shall be fabricated in compliance with this Section.

RD-160 PROOF OF DESIGN ADEQUACY

For Class I vessels, a design shall be considered adequate for the specified service conditions when one or more full-scale prototype vessels (see RG-321.1), after having been subjected to 100,000 cycles of pressure ranging from atmospheric to the design pressure (see RD-111 and Article RT-2), shall withstand a pressure not less than six times the specified maximum design pressure. The test fluid shall have a temperature as specified in RT-223.

A lesser number of cycles at a higher pressure is allowable for vessels fabricated per RG-404.2 (Filament Winding — Polar Boss Openings Only). See RT-223.5.

For Class II vessels, a design shall be considered adequate for the specified service when the design provisions of Article RD-11 and the Acceptance Test provisions of Article RT-6 have been met.

Copyright ASME International (BPVC)

ARTICLE RD-2
SHELLS OF REVOLUTION UNDER INTERNAL PRESSURE

RD-200 GENERAL

As indicated in RD-100, there are two methods permitted in this Section for the design of shells of revolution under internal pressure. In Nonmandatory Appendix AA suggested procedures are given by which tentative thicknesses of Class I vessel parts may be determined for use in fabricating prototype vessels for qualification of the design. The designer is free to use other equations to arrive at such tentative thicknesses.

Design qualification of shells of revolution of Class II vessels shall be in accordance with the design criteria of Article RD-11 and the Acceptance Test criteria of Article RT-6. Materials and laminate construction used in vessel fabrication shall be in accordance with the Procedure Specification (Form Q-120) for the specified vessel and fabrication procedure(s) that meet the requirements of Mandatory Appendix 1 which have been properly qualified by the Fabricator.

Copyright ASME International (BPVC)

ARTICLE RD-3
SHELLS OF REVOLUTION UNDER EXTERNAL PRESSURE

RD-300 GENERAL

(a) As indicated in RD-100, this Section addresses two methods by which shells of revolution under external pressure may be designed.

(b) Vessels with heat transfer jackets are outside the scope of this Section.

(c) Regardless of the design method used, the following factors shall be included in establishing the design:

(1) the low modulus of elasticity of the material;

(2) the anisotropic character of the material;

(3) the lack of uniformity in centrifugal castings;

(4) the orientation of filaments in filament-wound vessels.

(d) While there are no mandatory equations for design of Class I vessels, there are mandatory rules for testing the prototype vessel thus constructed, as set forth in RD-311 or RD-312.

(e) Class II vessels shall comply with Articles RD-11, RD-12, and RT-6 and the requirements set forth in RD-313 and RD-314.

RD-310 QUALIFICATION OF VESSELS FOR EXTERNAL PRESSURE SERVICE

(a) Class I vessels may be designed for either:

(1) external pressure only; or

(2) a combination of both internal and external pressure service.

(b) Class II vessels may only be designed for external pressure when the Design Specification includes both internal and external pressure design conditions. Class II vessels designed for external pressure only are not permitted.

Vessels for external pressure service shall be qualified as required by RD-311, RD-312, or RD-313.

RD-311 CLASS I VESSELS FOR BOTH EXTERNAL AND INTERNAL PRESSURE SERVICE

Class I vessels designed for both external and internal pressure shall have their designs qualified as required below.

(a) Prototype vessels shall be subjected to 100,000 cycles of pressure ranging from the maximum external design pressure, psi (kPa), to the maximum internal design pressure, psi (kPa), without failure. These external and internal pressure tests may be carried out in two steps (see RT-223).

(b) Prototype vessels shall then withstand an external pressure, psi (kPa), of twice the maximum external design pressure, or 29 in. of mercury (98.2 kPa), whichever is larger, without buckling.

(c) Prototype vessels shall then withstand a hydrostatic qualification pressure of at least six times the maximum internal design pressure.

RD-312 CLASS I VESSELS FOR EXTERNAL PRESSURE SERVICE ONLY

Class I vessels designed for external pressure only shall be designed for a minimum of 15 psi (100 kPa) internal pressure in addition to the design requirement for external pressure. The design shall be qualified by:

(a) subjecting a prototype vessel to an external pressure of twice the maximum external design pressure, or 29 in. of mercury (98.2 kPa), whichever is larger, without buckling; and

(b) cyclic pressure and hydrostatic qualification pressure tests in accordance with RD-160 based on 15 psi (100 kPa) internal design pressure.

RD-313 CLASS II VESSELS FOR BOTH EXTERNAL AND INTERNAL PRESSURE SERVICE

Class II vessels designed for both external and internal pressure shall have Design Calculations made for both conditions in accordance with Articles RD-11 and RD-12. The most severe condition shall govern and be the basis for design. The vessel shall then be acceptance tested for both internal and external pressure in accordance with Article RT-6 for both design conditions.

RD-314 CLASS II VESSELS FOR EXTERNAL PRESSURE ONLY

Class II vessels designed for external pressure only are not permitted.

Copyright ASME International (BPVC)

ARTICLE RD-4
SECONDARY BONDING

RD-400 DESIGN OF SECONDARY BONDED JOINTS

(a) Secondary bonded joints for Class I vessels may be made by adhesive bonding or laminate overlay. Secondary bonded joints for Class II vessels shall be made by laminate overlay only.

(b) Secondary bonded joints of Class I vessels shall be designed to withstand a minimum of six times the design pressure of the vessel without leakage. The adequacy of bonded joints shall be determined in accordance with the requirements of RD-160.

(c) Secondary bonded joints of Class II vessels shall employ laminate overlays that are calculated in accordance with Articles RD-11 and RD-12 and pass the Acceptance Test criteria of Article RT-6.

(d) Parts to be joined by secondary bonding shall be surface prepared as specified in the Procedure Specification to enhance bond strength and reduce stress intensifications caused by structural discontinuities.

Copyright ASME International (BPVC)

ARTICLE RD-5
OPENINGS AND THEIR REINFORCEMENT

RD-500 GENERAL

As indicated in RD-100, there are two methods in this Section for determining the design adequacy of openings and their reinforcement.

Suggested procedures are given in Article AA-4 for determining how to reinforce openings in Class I vessels. The designer is free to use other procedures.

Reinforcement of openings in Class II vessels shall comply with the procedures of Articles RD-11 and RD-12.

RD-510 QUALIFICATION

RD-511 QUALIFICATION OF CLASS I VESSELS

(a) The prototype vessel, complete with all openings and their reinforcement as specified in the Design Drawing, shall be qualified by cyclic pressure and hydrostatic qualification pressure tests at the design temperature and pressure in accordance with RT-223.

(b) Changes outside the scope of the Design Report in the design of openings and their reinforcement shall be considered as changes in the vessel design, and the vessel shall be requalified, if required, as specified in RT-201 and RT-202.

RD-512 QUALIFICATION OF CLASS II VESSELS

(a) Vessels built in accordance with Design Calculations as set forth in Articles RD-11 and RD-12 and as specified in the Design Drawing and the Procedure Specification, shall be pressure tested and nondestructively monitored as specified in Article RT-6.

(b) Repairs and modifications to the vessel shall require it to be retested per Article RT-6.

RD-520 RESTRICTIONS FOR CLASS II VESSELS

(a) Openings in Class II vessels shall be flanged nozzles having a minimum diameter of 2 in. (50 mm).

(b) Screwed connections, or metal insert threaded connections, in the vessel shell or head are not allowed.

Copyright ASME International (BPVC)

ARTICLE RD-6
NOZZLES AND OTHER CONNECTIONS

RD-600 GENERAL

As indicated in RD-100, there are two methods in this Section for determining the design adequacy of nozzles and other openings. The designer is referred to the Articles AA-2 and AA-4 for general guidance for Class I vessels. For Class II vessels the designer shall comply with Articles RD-11 and RD-12.

RD-610 QUALIFICATIONS

RD-611 QUALIFICATION OF CLASS I VESSELS

(a) The prototype vessel shall be qualified by cyclic pressure and hydrostatic qualification pressure tests at the design temperature and pressure in accordance with RT-223, with nozzles and other connections as specified on the Design Drawings.

(b) Any change in the design of nozzles or other connections shall be considered a change in the vessel design, and the combinations shall be requalified, if required, as specified in RT-201 and RT-202.

RD-612 QUALIFICATION OF CLASS II VESSELS

(a) Each specified vessel, including nozzles and other connections, shall be pressure tested and nondestructively monitored as specified in Article RT-6.

(b) Repairs and modifications will require that the complete vessel be retested per Article RT-6.

RD-613 RESTRICTIONS FOR CLASS II VESSELS

(a) Nozzles for Class II vessels shall be limited to flanged nozzles that conform to the requirements of RD-620 and have a minimum diameter of 2 in. (50 mm).

(b) Nozzles and other protrusions shall be capable of supporting a 250 lb (1 000 N) vertical load.

RD-620 INTEGRAL FLANGED NOZZLES FOR CLASS II VESSELS

RD-620.1 Integral Flange Physical Dimensions. All integral flanged nozzles shall have full-face flanges and be fabricated by the contact-molding process. The flanges and nozzles shall be of integral construction as shown in Table RD-620.1, whereby the nozzle and flange are fabricated in a single contact-molding operation. For pressures greater than 150 psi (1 MPa) and/or nozzles greater than 12 in. (DN 300), see RD-1176 for nozzle design. The flange physical dimensions (except thickness) shall be in accordance with ASME B16.5 (Class 150 flanges) for NPS[8] 2 to NPS 24 (DN 50 to DN 600) and in accordance with ASME B16.1 (Class 125) for NPS over 24 (DN 600) unless otherwise noted and specified in the Design Report. The nozzle shall extend at least 6 in. (150 mm) from the shell outer surface to the nozzle flange face unless otherwise permitted in the Procedure Specification and specified in the Design Report.

RD-620.2 Flange Bolt Holes. All bolt holes shall be spot faced for ASME B18.22.1, Type A washers as shown in Table RD-620.1, unless another size is permitted in the Procedure Specification and specified in the Design Report. Overall machine facing of the back of flanges is not permitted.

RD-620.3 Flange Faces. Flange face drawback and waviness shall not exceed $\frac{1}{32}$ in. (0.8 mm) as measured at or inside the bolt circle. No reverse drawback is permitted. See Figure RD-620.3 sketches (a), (b), and (c).

RD-620.4 Gussets. All nozzles of 6 in. nominal diameter (DN 150) and smaller shall be provided with gussets. Gussets shall be plate type [see Figure RD-620.4(a)] or conical [see Figure RD-620.4(b)]. Plate gussets, if used, shall be evenly spaced around the nozzle. Gussets shall be added after complete assembly of the nozzle on the shell and shall not interfere with bolting or seating of the washer into the spot face.

RD-620.5 Nozzle Installation. Nozzles shall be installed per Figure RD-620.5 or Figure RD-620.6 as specified in the Procedure Specification. Nozzle opening reinforcement (reinforcing pad) and secondary bonding to secure the nozzle to the vessel shall be calculated per RD-1174.2. If specified in the Procedure Specification, the secondary overlay necessary to bond nozzles to the shell may be evenly divided inside and outside the vessel as shown in Figures RD-620.5 and RD-620.6. An inside overlay consisting only of a corrosion-resistant liner per RD-101 shall not be considered as part of the secondary overlay.

Copyright ASME International (BPVC)

RD-621 FLANGE DESIGN FOR CLASS II VESSELS

Flange design shall be in accordance with RD-1176. The allowable stress shall be 0.001 times the lower of the longitudinal or transverse modulus of the flange laminate as determined by Article RT-7.

Flange thicknesses based on an allowable stress of 2,500 psi (17 MPa) are precalculated for nozzles sizes 2 in. to 48 in. (DN 50 to DN 1 200) for internal hydrostatic pressures of 25 psi to 150 psi (170 kPa to 1 MPa) and are listed in Table RD-620.1.

Copyright ASME International (BPVC)

Copyright ASME International (BPVC)
Provided by IHS under license with ASME
No reproduction or networking permitted without license from IHS

Table RD-620.1
Flange and Nozzle Dimensions for Hand Lay-Up and Pressure-Molded Flanges

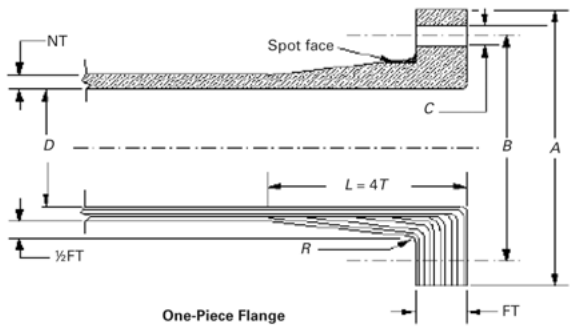

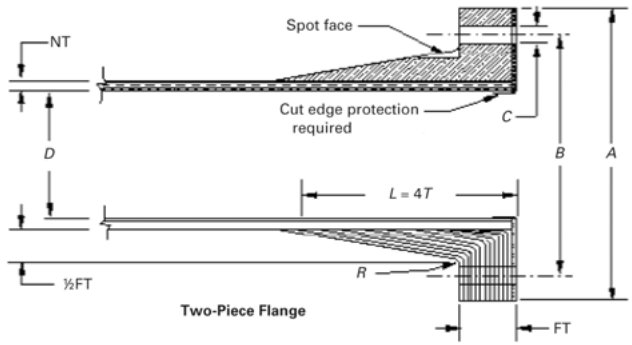

U.S. Customary Units, in. and psi

Size, in.	Outside Dia., *A*	Bolt Circle, *B*	Bolt Hole Dia., *C*	Dia. Spot Facing	Bolts, Size Dia.	No. of Bolts	Flange and Nozzle Thickness, in., for Pressure, psi												Gusset Spacing
							25		50		75		100		125		150		
							FT	NT	FT	NT	FT	NT	FT	NT	FT	NT	FT	NT	
2	6	4.75	0.75	1.75	0.63	4	0.5	0.25	0.5	0.25	0.63	0.25	0.63	0.25	0.69	0.25	0.75	0.25	12
3	7.5	6	0.75	1.75	0.63	4	0.5	0.25	0.56	0.25	0.69	0.25	0.75	0.25	0.81	0.31	0.88	0.31	13.5
4	9	7.5	0.75	1.75	0.63	8	0.5	0.25	0.63	0.25	0.75	0.25	0.88	0.31	1	0.31	1	0.31	15
6	11	9.5	0.88	2	0.75	8	0.56	0.25	0.69	0.25	0.81	0.31	1	0.31	1	0.38	1.13	0.44	17
8	13.5	11.75	0.88	2	0.75	8	0.625	0.25	0.81	0.31	1	0.38	1	0	1.31	0.44	1.31	0.5	19.5
10	16	14.25	1	2.25	0.88	12	0.75	0.25	1	0.31	1.13	0.38	1.25	0.4375	1.38	0.5	1.5	0.56	19.5
12	19	17	1	2.25	0.88	12	0.81	0.25	1	0.31	1.31	0.44	1.5	0.5	1.69	0.56	1.88	0.69	19.5
14	21	18.75	1.13	2.5	1	12	0.88	0.313	1.13	0.38	1.38	0.44	1.56	0.56	1.81	0.69	(1)	(1)	19.5
16	23.5	21.25	1.13	2.5	1	16	1	0.313	1.25	0.38	1.5	0.5	1.69	0.63	2	0.75	(1)	(1)	19.5
18	25	22.75	1.25	2.75	1.13	16	1	0.313	1.38	0.41	1.56	0.56	(1)	(1)	(1)	(1)	(1)	(1)	19.5
20	27.5	25	1.25	2.75	1.13	20	1.13	0.313	1.5	0.41	1.69	0.56	(1)	(1)	(1)	(1)	(1)	(1)	19.5
24	32	29.5	1.38	3	1.25	20	1.25	0.313	1.63	0.5	2	0.69	(1)	(1)	(1)	(1)	(1)	(1)	19.5
30	38.75	36	1.38	3	1.25	28	1.5	0.375	2	0.56	2.38	0.81	(1)	(1)	(1)	(1)	(1)	(1)	19.5
36	46	42.75	1.63	3.5	1.5	32	2	0.438	2.25	0.69	(1)	(1)	(1)	(1)	(1)	(1)	(1)	(1)	19.5
42	53	49.5	1.63	3.5	1.5	36	2.13	0.438	2.63	0.81	(1)	(1)	(1)	(1)	(1)	(1)	(1)	(1)	19.5
48	59.5	56	1.63	3.5	1.5	44	2.25	0.5	3	0.88	(1)	(1)	(1)	(1)	(1)	(1)	(1)	(1)	19.5

Licensee=Khalda Petroleum/5986215001, User=Amer, Mohamed
Not for Resale, 07/02/2019 13:56:36 MDT

Copyright ASME International (BPVC)
Provided by IHS under license with ASME
No reproduction or networking permitted without license from IHS

Table RD-620.1
Flange and Nozzle Dimensions for Hand Lay-Up and Pressure-Molded Flanges (Cont'd)

SI Units, mm and kPa

Size, mm	Outside Dia., *A*	Bolt Circle, *B*	Bolt Hole Dia., *C*	Dia. Spot Facing	Bolts, Size Dia.	No. of Bolts	Flange and Nozzle Thickness, mm, for Pressure, kPa												Gusset Spacing
							170 kPa		340 kPa		510 kPa		690 kPa		860 kPa		1 000 kPa		
							FT	NT	FT	NT	FT	NT	FT	NT	FT	NT	FT	NT	
50	152	121	19	44	16	4	13	6	13	6	14	6	16	6	17	6	19	6	305
76	191	152	19	44	16	4	13	6	14	6	17	6	19	6	21	8	22	8	343
102	229	191	19	44	16	8	13	6	16	6	19	6	22	8	24	8	25	8	381
152	279	241	22	51	19	8	14	6	17	6	21	8	25	10	43	10	29	11	432
203	343	298	22	51	19	8	16	6	21	8	24	10	27	11	30	11	33	13	495
254	406	362	25	57	22	12	19	6	24	8	29	10	32	13	35	13	38	14	495
305	483	432	25	57	22	12	21	6	27	8	33	11	38	14	43	14	48	17	495
356	533	476	29	64	25	12	22	8	29	10	35	11	40	16	46	17	(1)	(1)	495
406	597	540	29	64	25	16	24	8	32	10	38	13	43	17	51	19	(1)	(1)	495
457	635	578	32	70	29	16	25	8	35	11	40	14	(1)	(1)	(1)	(1)	(1)	(1)	495
508	699	635	32	70	29	20	29	8	38	11	43	14	(1)	(1)	(1)	(1)	(1)	(1)	495
610	813	749	35	76	32	20	32	8	41	13	51	17	(1)	(1)	(1)	(1)	(1)	(1)	495
762	984	914	35	76	32	28	38	10	51	14	60	21	(1)	(1)	(1)	(1)	(1)	(1)	495
914	1 168	1 086	38	89	38	32	51	11	57	17	(1)	(1)	(1)	(1)	(1)	(1)	(1)	(1)	495
1 067	1 346	1 257	38	89	38	36	54	11	67	21	(1)	(1)	(1)	(1)	(1)	(1)	(1)	(1)	495
1 219	1 511	1 422	38	89	38	44	57	13	75	22	(1)	(1)	(1)	(1)	(1)	(1)	(1)	(1)	495

GENERAL NOTES:

(a) Hub reinforcement equals $T/2$; $R = \frac{1}{4}$ in. min. (6 mm min.).

(b) Above table is based on an alternate chopped strand mat/woven roving laminates.

(c) Integral flange required for sizes up to 24-in. (600-mm) diameter.

(d) Gaskets shall be $\frac{1}{8}$-in.-thick (3-mm-thick), full-face elastomeric material with a hardness of Shore A60 ±5.

NOTE: (1) The flange outside diameter and bolt circle must be modified for the design of these flanges. Flanges are to be calculated according to RD-1176.

Licensee=Khalda Petroleum/5986215001, User=Amer, Mohamed
Not for Resale, 07/02/2019 13:56:36 MDT

Figure RD-620.3
Flange Tolerances

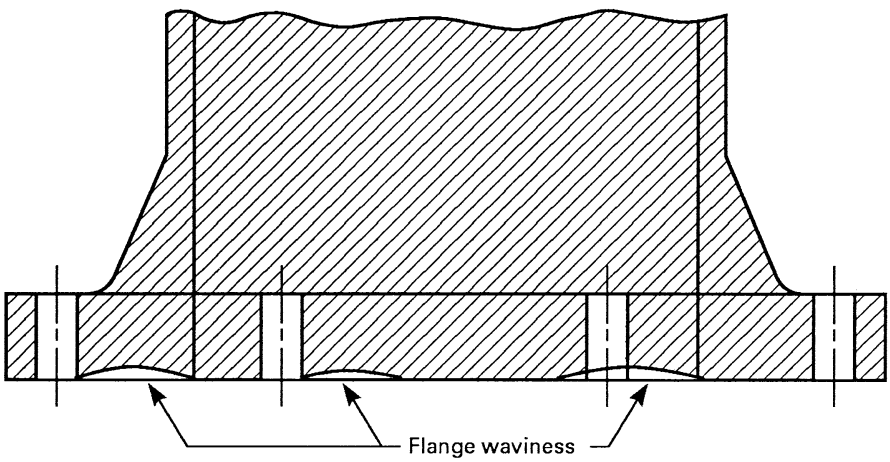

(a) Flange Waviness

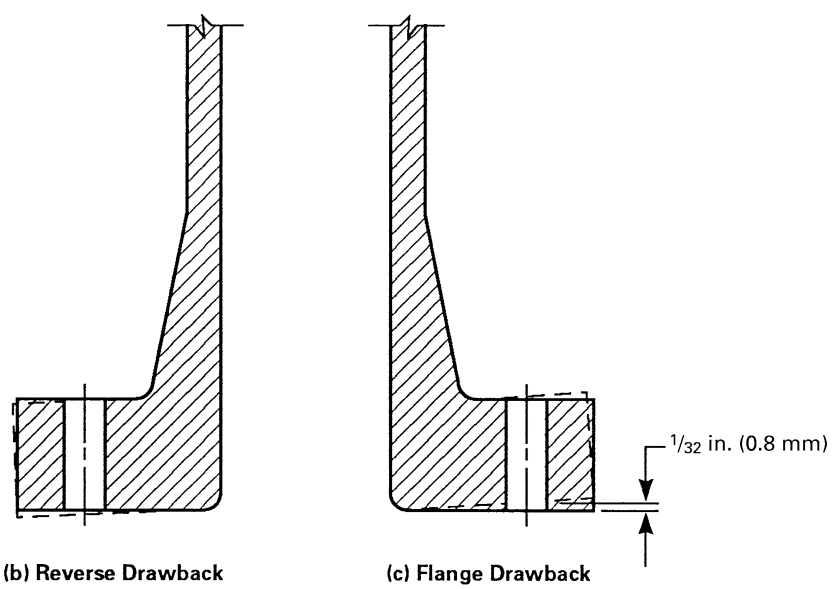

(b) Reverse Drawback

(c) Flange Drawback

Copyright ASME International (BPVC)

Figure RD-620.4(a)
Plate-Type Gussets

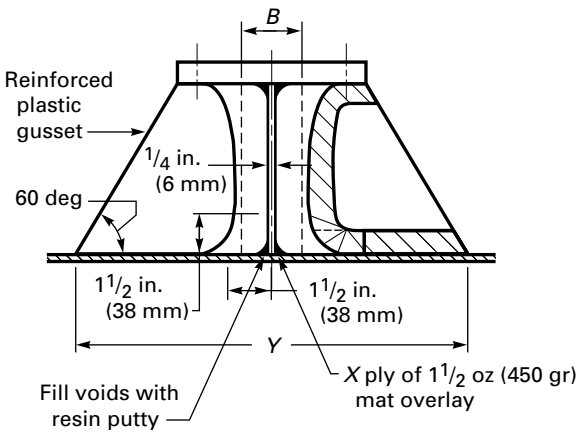

Size *B*, in.	Size *B*, mm	No. of Plies, *X*	No. of Gussets	*Y*, in.	*Y*, mm
2	50	3	4	12	300
3	75	3	4	13 1/2	340
4	100	3	4	15	375
6	150	3	4	18	450

GENERAL NOTE: Gussets shall be evenly spaced around nozzle. Gussets shall be added after complete assembly of nozzle on shell. Gussets are not required on nozzles over 6 in. (150 mm).

Figure RD-620.4(b)
Typical Cone-Type Gusset

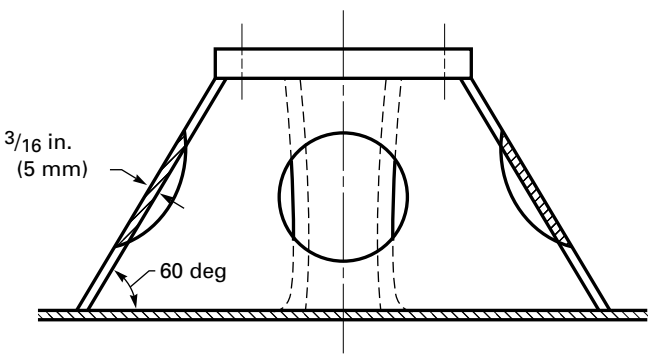

Copyright ASME International (BPVC)

Figure RD-620.5
Flush Nozzle Installation

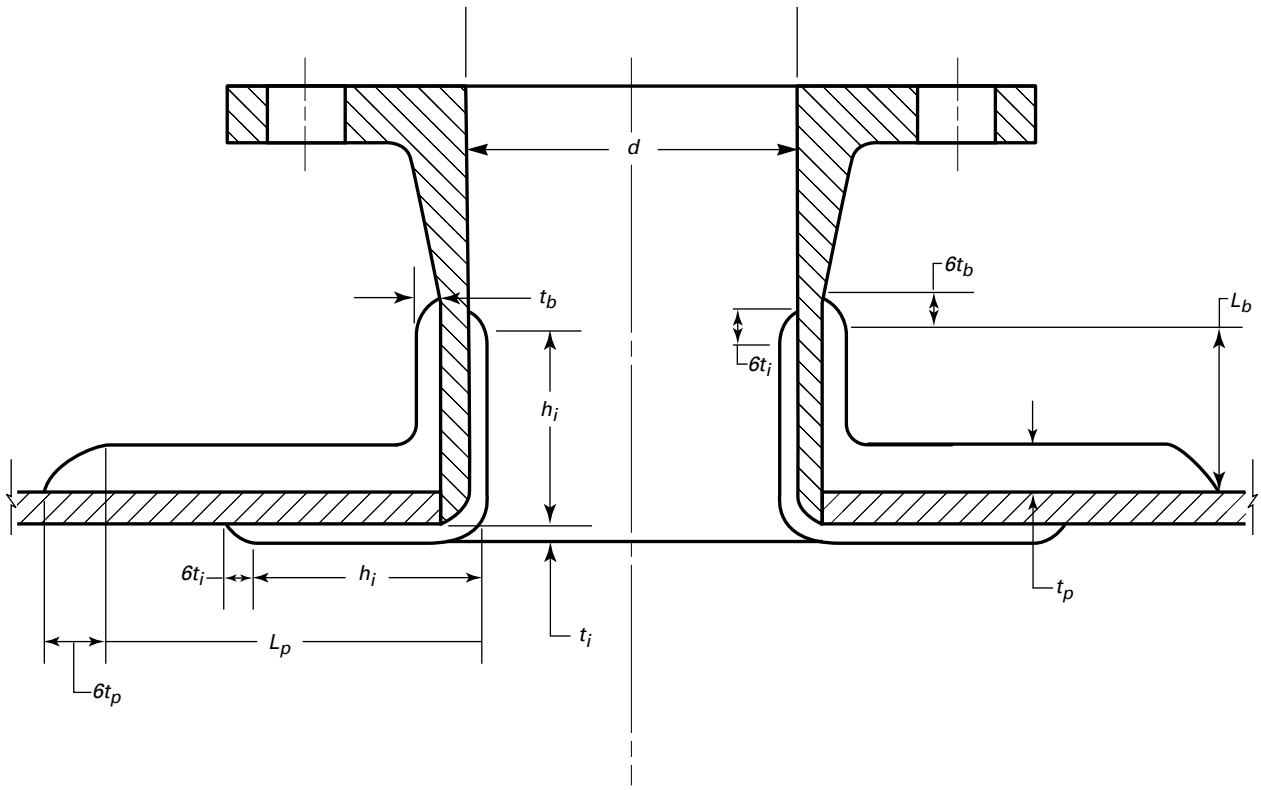

Legend:
d = inside diameter of nozzle
h_i = inside shear bond length
L_b = shear length
L_p = length of pad
t_b = overlay thickness on nozzle
t_i = inside overlay thickness
t_p = thickness of reinforcing pad

Copyright ASME International (BPVC)

Figure RD-620.6
Penetrating Nozzle Installation

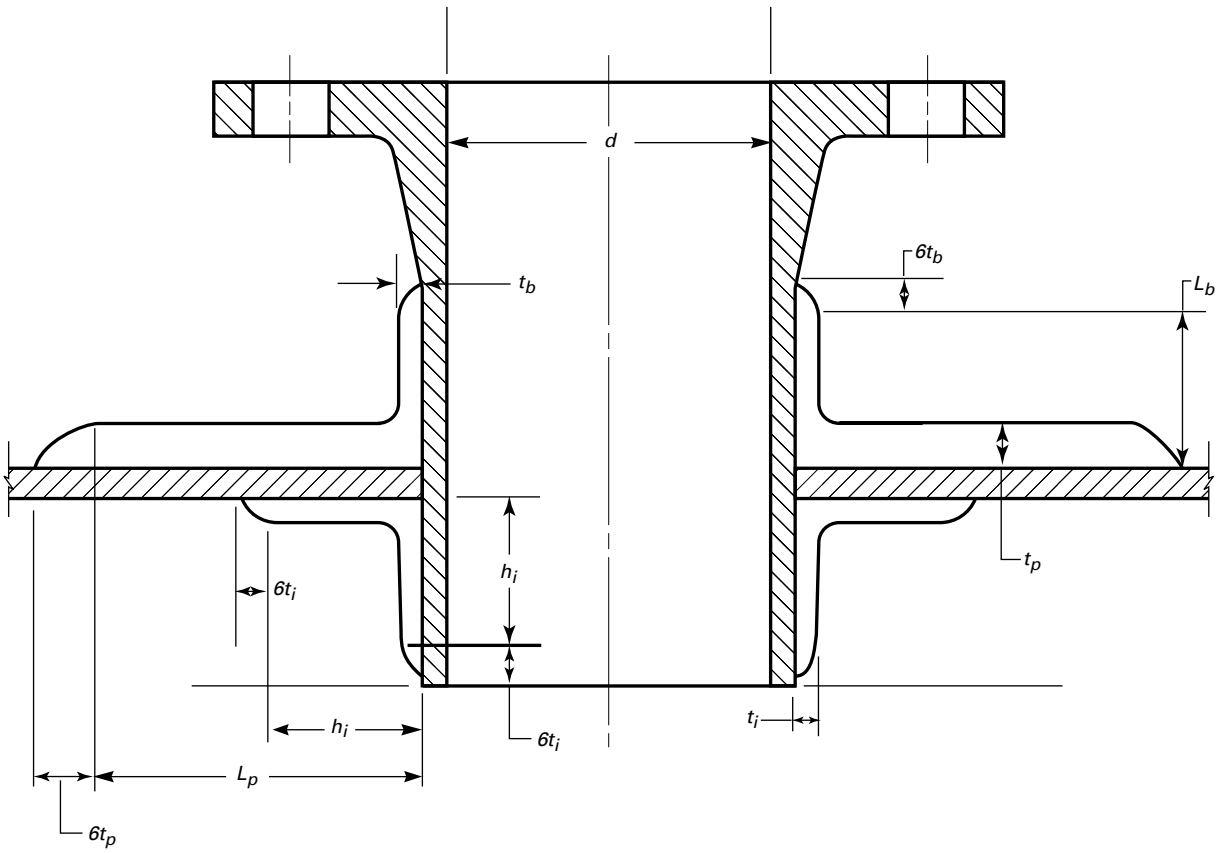

Legend:
d = inside diameter of nozzle
h_i = inside shear bond length
L_b = shear length
L_p = length of pad
t_b = overlay thickness on nozzle
t_i = inside overlay thickness
t_p = thickness of reinforcing pad

Copyright ASME International (BPVC)

ARTICLE RD-7
BOLTED CONNECTIONS

RD-700 FLAT HEADS, COVERS, AND BLIND FLANGES

Flat heads, covers, and blind flanges shall be made of either

(a) laminate materials covered in Article RM-1; or

(b) one of the metals listed in Section VIII, Division 1, for plates, forgings, or castings.

RD-700.1 For Class I Vessels. Some acceptable types of flat heads for Class I vessels are shown in Figure RD-700.1.

RD-700.2 For Class II Vessels. The only acceptable types of bolted connection for Class II vessels shall be the types listed in RD-620.

RD-700.3 Nomenclature. The symbols used in this Article and Figure RD-700.1 are defined as follows:

C = factor depending upon the method of attachment of head, cover, or flange, dimensionless (see Figure RD-700.1)

d = diameter as shown in Figure RD-700.1, in. (mm)

P = design pressure (see RD-111), psi (MPa)

S = allowable stress, psi (MPa). For metal flat heads, use applicable table of maximum allowable stress values in Section VIII, Division 1. For flat heads fabricated from laminated materials covered in Article RM-1, use allowable stress of the specified laminate as specified in the Procedure Specification and which will satisfy the specified design conditions in accordance with RD-160.

t = minimum required thickness of flat head, cover, or flange, exclusive of corrosion allowance, in. (mm)

RD-701 MINIMUM REQUIRED THICKNESS

The minimum required thickness of flat, unstayed, circular heads, covers, and blind flanges shall be calculated by the following equation:

$$t = d\sqrt{(CP/S)} \quad (1)$$

RD-710 BOLTED FLANGED CONNECTIONS

RD-711 FLANGES AND FLANGED FITTINGS CONFORMING TO ANSI B16.5 AND B16.1

The dimensional requirements of flanges (except thickness) used in bolted flange connections to external piping shall conform to ANSI B16.5-1981, Steel Pipe Flanges and Flanged Fittings, or ANSI B16.1, Cast Iron Pipe Flanges and Flanged Fittings, for nozzles over NPS 24, unless otherwise specified in the Design Report. Thickness of flanges shall be determined in accordance with RD-100 and RD-160.

Figure RD-700.1
Acceptable Types of Flat Heads for Class I Vessels

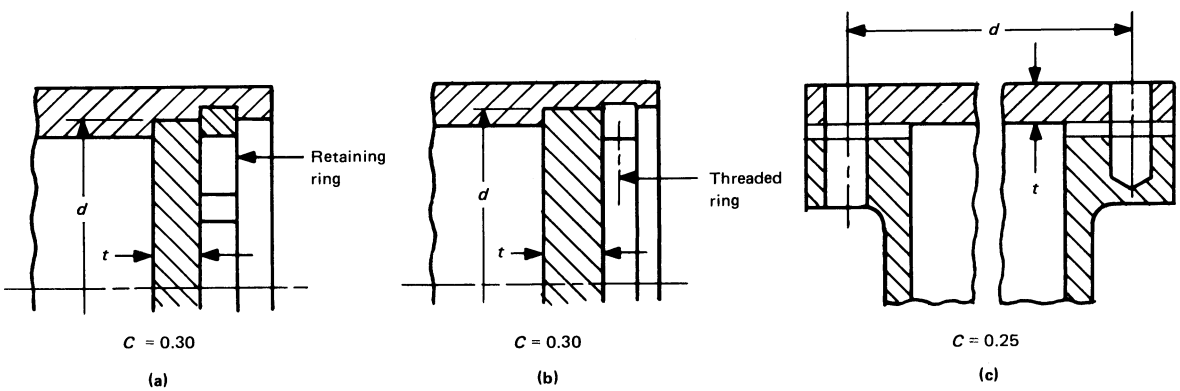

Copyright ASME International (BPVC)

RD-712 FLANGES NOT CONFORMING TO ANSI B16.5-1981

RD-712.1 For Class I Vessels. Flanges used for joining sections of shells or for similar purposes shall be designed using full-face gaskets or self-energizing types, such as o-rings. Such flange designs may be used provided they are proven adequate for the specified design conditions in accordance with RD-160.

RD-712.2 For Class II Vessels. Flanges used for joining sections of shells or for similar purposes shall be designed using full-face gaskets or self-energizing types, such as o-rings.

RD-720 OPENINGS IN FLAT METALLIC HEADS, METALLIC COVERS, AND METALLIC BLIND FLANGES

Openings in flat heads, covers, and blind flanges shall conform to the requirements of RD-721 for reinforcement for all openings, except that single openings in flat heads, covers, and blind flanges do not require reinforcement other than that inherent in the construction under the following conditions:

(a) welded or brazed connections to metal heads attached in accordance with the applicable rules of Section VIII, Division 1, and not larger than

(1) NPS 3 (DN 80) heads $^{3}/_{8}$ in. (10 mm) thick or less;

(2) NPS 2 (DN 50) heads over $^{3}/_{8}$ in. (10 mm) thick;

(b) threaded, studded, or expanded connections in Class I vessels only in which the hole cut in the head is not greater than NPS 2 (DN 50).

RD-721 REINFORCEMENT REQUIREMENTS

(a) Flat heads that have an opening with a diameter that does not exceed one-half of the head diameter d shall have a total cross-sectional area of reinforcement not less than that given by the equation

$$A = 0.5Bt$$

where B is the diameter of the finished opening in its corroded condition and t is as defined in RD-700.3.

(b) Flat heads that have an opening with a diameter that exceeds one-half of the head diameter, as defined in RD-700.3, shall be restricted to a metal material and shall be designed in accordance with the rules for bolted flange connections in Section VIII, Division 1, Mandatory Appendix 2.

(c) As an alternative to (b) above, the thickness of flat heads may be increased to provide the necessary opening reinforcement by using $2C$ in place of C in eq. RD-701(1).

RD-730 WELDED OR BRAZED CONNECTIONS TO METAL FLAT HEADS, COVERS, OR BLIND FLANGES

(a) Connections to metallic flat heads, covers, or blind flanges attached by welding shall meet the requirements of Section VIII, Division 1, Part UW.

(b) Connections to metallic flat heads, covers, or blind flanges attached by brazing shall meet the requirements of Section VIII, Division 1, Part UB.

Copyright ASME International (BPVC)

ARTICLE RD-8
QUICK-ACTUATING CLOSURES (FOR CLASS I VESSELS ONLY)

RD-800 GENERAL DESIGN REQUIREMENTS

Closures other than the multibolted type designed to provide access to the contents space of a pressure vessel shall have the locking mechanism or locking device so designed that failure of any one locking element or component in the locking mechanism cannot result in the failure of all other locking elements and the release of the closure. Quick-actuating closures shall be designed and installed so that it may be determined by visual external observation that the holding elements are in good condition and that their locking elements, when the closure is in the closed position, are in full engagement. Such closures shall be limited to Class I vessels and shall meet the requirements of RD-100 and RD-160.

RD-801 SPECIFIC DESIGN REQUIREMENTS

Quick-actuating closures that are held in position by positive locking devices, and that are fully released by partial rotation or limited movement of the closure itself or the locking mechanism, and any closure that is other than manually operated, shall be designated so that when the vessel is installed, the following conditions are met:

(a) the closure and its holding elements are fully engaged in their intended operating position before pressure can be built up in the vessel;

(b) pressure tending to force the closure clear of the vessel will be released before the closure can be fully opened for access;

In the event that compliance with (a) and (b) above is not inherent in the design of the closure and its holding elements, provision shall be made so that devices to accomplish this can be added when the vessel is installed. It is recognized that it is impractical to write detailed requirements to cover the multiplicity of devices used for quick access or to prevent negligent operation or the circumventing of safety devices. Any device or devices that will provide the safeguards broadly described in (a), (b), and this paragraph will meet the intent of the Code. The design of the closure shall be verified as part of the prototype qualification.

RD-801.1 Permissible Design Deviations for Manually Operated Closures. Quick-actuating closures that are held in position by a locking device or mechanism that requires manual operation and are designated so that there will be leakage of the contents of the vessel prior to disengagement of the locking elements and release of closure need not satisfy RD-801(a) and RD-801(b). However, such closures shall be equipped with an audible and/or visible warning device that will serve to warn the operator if pressure is applied to the vessel before the closure and its holding elements are fully engaged in their intended position and, further, will serve to warn the operator if an attempt is made to operate the locking mechanism or device before the pressure within the vessel is released.

RD-802 REQUIRED PRESSURE-INDICATING DEVICES

All vessels having quick-actuating closures shall be provided with a pressure-indicating device visible from the operating station.

RD-803 QUALIFICATION

Quick-actuating closures shall meet the proof of design adequacy requirements of RD-160.

Copyright ASME International (BPVC)

ARTICLE RD-9
ATTACHMENTS AND SUPPORTS

RD-900 GENERAL

There are no mandatory rules in this Section governing the design of attachments and supports for Class I vessels. The designer is referred to Article AA-5 for suggested procedures to be followed in establishing prototype design.

Design of attachments and supports for Class II vessels shall be in accordance with Article RD-11 and shall be certified by a registered Professional Engineer in accordance with RD-1111.

RD-910 QUALIFICATION

(a) For Class I vessels, a prototype vessel complete with attachments and supports designed for it shall be qualified by cyclic pressure and hydrostatic qualification pressure tests at the design pressure and temperature in accordance with RT-223.

(b) Class II vessels, complete with attachments and supports, shall be tested as specified in Article RT-6.

(c) Any change in the design of the attachments and supports shall be considered a change in the vessel design, and the combination shall be requalified.

Copyright ASME International (BPVC)

ARTICLE RD-10
ACCESS AND INSPECTION OPENINGS

RD-1000 GENERAL REQUIREMENTS

All pressure vessels subject to internal corrosion or having parts subject to erosion or mechanical abrasion shall be provided with suitable manhole, handhole, or other inspection openings for examination and cleaning.

RD-1001 REQUIREMENTS FOR VESSELS 12 in. (300 mm) IN DIAMETER[9] AND SMALLER

For Class I vessels 12 in. (300 mm) or less in diameter, openings for inspection only may be omitted if there are at least two removable pipe connections not less than NPS $^3/_4$ (DN 20) that can be utilized for adequate internal inspection. Inspection openings for Class II vessels shall comply with RD-520.

RD-1002 REQUIREMENTS FOR VESSELS OVER 12 in. (300 mm) BUT NOT OVER 16 in. (400 mm) IN INSIDE DIAMETER

Class I vessels over 12 in. (300 mm) but not over 16 in. (400 mm) in diameter, that are to be installed so that they must be disconnected from an assembly to permit inspection, need not be provided with additional openings for inspection only, if there are at least two removable pipe connections not less than NPS $1^1/_2$ (DN 40), provided such openings are so located that adequate internal inspections can be made. Inspection openings for Class II vessels shall comply with RD-520.

RD-1010 EQUIPMENT OF VESSELS REQUIRING ACCESS OR INSPECTION OPENINGS

Vessels that require access or inspection openings shall be equipped as follows:[9]

(a) Class I vessels less than 18 in. (450 mm) and over 16 in. (400 mm) inside diameter shall have at least two handholes or two plugged, threaded inspection openings of not less than NPS $1^1/_2$ (DN 40).

(b) Class I vessels 18 in. (450 mm) to 36 in. (920 mm), inclusive, inside diameter shall have a manhole or at least two handholes or two threaded pipe-plug inspection openings of not less than NPS 2 (DN 50).

(c) Class I vessels over 36 in. (900 mm) inside diameter shall have a manhole [see RD-1020(a)], except those vessels whose shape or use makes one impracticable shall have at least two handholes 4 in. × 6 in. (100 mm × 150 mm) or two equal openings of equivalent area.

(d) When handholes or pipe-plug openings are permitted for Class I vessels inspection openings in place of a manhole, one handhole or one pipe-plug opening shall be in each head or in the shell near each head.

(e) Openings with removable heads or cover plates intended for other purposes may be used in place of the required inspection openings, provided they are equal to at least the size of the required inspection openings and provided they are located so that adequate internal inspection can be made.

(f) A single opening with removable head or cover plate may be used in place of all the smaller inspection openings, provided it is of such size and location to afford at least an equal view of the interior.

(g) Accesses or inspection openings for Class II vessels shall comply with RD-520 and RD-1174.

RD-1020 SIZE OF MANHOLE OPENINGS FOR CLASS I VESSELS

When inspection or access openings are required, they shall comply with at least the following requirements:

(a) Type and Minimum Size of Manhole. An elliptical or obround manhole shall be not less than 12 in. × 16 in. (300 mm × 400 mm). A circular manhole shall be not less than 16 in. (400 mm) in inside diameter.

(b) Minimum Size of Handholes. A handhole opening shall be not less than 2 in. × 3 in. (50 mm × 75 mm), but should be as large as is consistent with the size of the vessel and the location of the opening.

RD-1030 SIZE OF MANHOLE OPENINGS FOR CLASS II VESSELS

When inspection or access openings are required for Class II vessels, they shall comply with RD-520 and RD-1174.

Copyright ASME International (BPVC)

RD-1031 DESIGN OF ACCESS AND INSPECTION OPENINGS IN SHELLS AND HEADS

All access and inspection openings in a shell or unstayed head of a Class I vessel shall be designed in accordance with the suggested procedures of Nonmandatory Appendix AA or their equivalent and shall be fabricated into the prototype vessel or vessels used to qualify the design in accordance with RD-160.

All access and inspection openings in Class II vessels shall comply with the procedures of Article RD-11.

RD-1040 MINIMUM GASKET BEARING WIDTHS FOR MANHOLE COVER PLATES

Manholes of the type in which the internal pressure forces the cover plate against a flat gasket shall have a minimum gasket bearing width of $^{11}/_{16}$ in. (17 mm).

RD-1050 THREADED OPENINGS IN CLASS I VESSELS

RD-1051 MATERIALS FOR THREADED PLUGS AND CAPS

(a) When a threaded opening is to be used for inspection or cleaning purposes, the closing plug shall be designed with due consideration of the relationships between the moduli of elasticity of the materials of the vessel and the plug and between the thermal coefficients of expansion of those materials.

(b) A Class I vessel, with the threaded opening and closure in place, shall be qualified by cyclic pressure and hydrostatic qualification pressure tests in accordance with RT-223.

(c) Any change in the design of openings shall be considered a change in the design of the vessel, and the vessel with new opening or openings shall be requalified.

RD-1052 PERMISSIBLE TYPES OF THREADS

The thread for threaded openings shall be a standard taper pipe thread, except a straight thread of equal strength may be used if additional sealing means to prevent leakage are provided.

RD-1060 THREADED OPENINGS IN CLASS II VESSELS

Threaded openings are not permitted in any pressure-containing component of a Class II vessel. The only exception is a threaded opening, not to exceed 2 NPT (DN 50), in a metallic flat cover for a flanged manway or nozzle.

Copyright ASME International (BPVC)

ARTICLE RD-11
MANDATORY DESIGN RULES FOR CLASS II VESSELS[10]

RD-1100 GENERAL

Class II vessels and vessel parts shall be designed using the stress analysis methods given in this Article. Class II vessels are those whose designs are qualified by adherence to the mandatory design rules of this Article and are acceptance tested individually as specified in Article RT-6. The engineering constants for laminates used in the design and fabrication of Class II vessels shall be determined in accordance with Article RD-12.

RD-1110 DESIGN BASIS

Two methods of design are permitted under this Article:

(a) Method A — Design Rules: RD-1170

(b) Method B — Discontinuity Analysis: RD-1180

Specific design by either method shall be qualified by acceptance testing as specified in Article RT-6. The maximum strain theory of failure is used for Method A, and the quadratic interaction criterion is used for Method B.

RD-1111 CERTIFICATION OF DESIGN

A Professional Engineer knowledgeable in the design of reinforced plastics and registered in one or more of the states of the United States or provinces of Canada shall certify that the calculations contained in the Fabricator's Design Report are in compliance with the rules of this Article and that the vessel design complies with this Section for Class II vessels.

RD-1120 DESIGN LIMITATIONS

The maximum design pressure and inside diameter of Class II vessels shall be restricted as follows (see Figure RD-1120.1).

(a) Vessels designed shall have pressure and diameter restrictions as follows:

(1) the algebraic product of the internal pressure [psi (kPa)] and the inside diameter [in. (mm)] shall not exceed 14,400 lb/in. (for Customary units, PD = 14,400 lb/in.; for SI units, PD = 2 522 kPa·m);

(2) the maximum internal pressure shall not exceed 250 psi (1 724 kPa);

(3) the maximum inside diameter shall not exceed 192 in. (4.88 m).

(b) Vessels with diameters greater than 144 in. may be designed using a combination of Methods A and B.

(c) Vessels designed by either Method A or B shall be limited to an external pressure of 15 psi (100 kPa).

(d) Design temperature shall be as limited by RD-112.

(e) Vessels may be designed in their entirety by Method B (discontinuity analysis).

RD-1130 DESIGN ACCEPTABILITY

Design acceptability shall be demonstrated by comparing design stress and strain values with calculated buckling values, allowable strain values, and the mechanical properties obtained from the physical test defined in Article RT-7. The appropriate comparison will depend on the governing criterion and is specified in RD-1170 through RD-1189.

RD-1140 LOADINGS

Loadings that shall be considered in the design of specific vessels under this Article are specified in RD-120.

RD-1150 VESSEL PARTS SUBJECT TO DESIGN ANALYSIS

Design Calculations shall be provided for pressure-containing components and support members to include but not be limited to:

(a) vessel shell;

(b) vessel heads;

(c) openings and their reinforcement;

(d) secondary bonds joining two or more vessel parts;

(e) internal and external attachments (e.g., packing supports, vessel skirts, hold-down lugs, support rings, etc.).

RD-1160 LAMINATE COMPOSITION

RD-1161 SCOPE

Laminates acceptable under the Code for Class II vessels are limited to those made from resin and fiber specified in RM-100 and RM-120 by either contact-molded or filament-wound methods. No restrictions are placed on the fiber form, the ply sequence, or ply orientations. However, laminates used in Class II vessels shall

Copyright ASME International (BPVC)

Figure RD-1120.1
Design Limitations for Class II Vessels

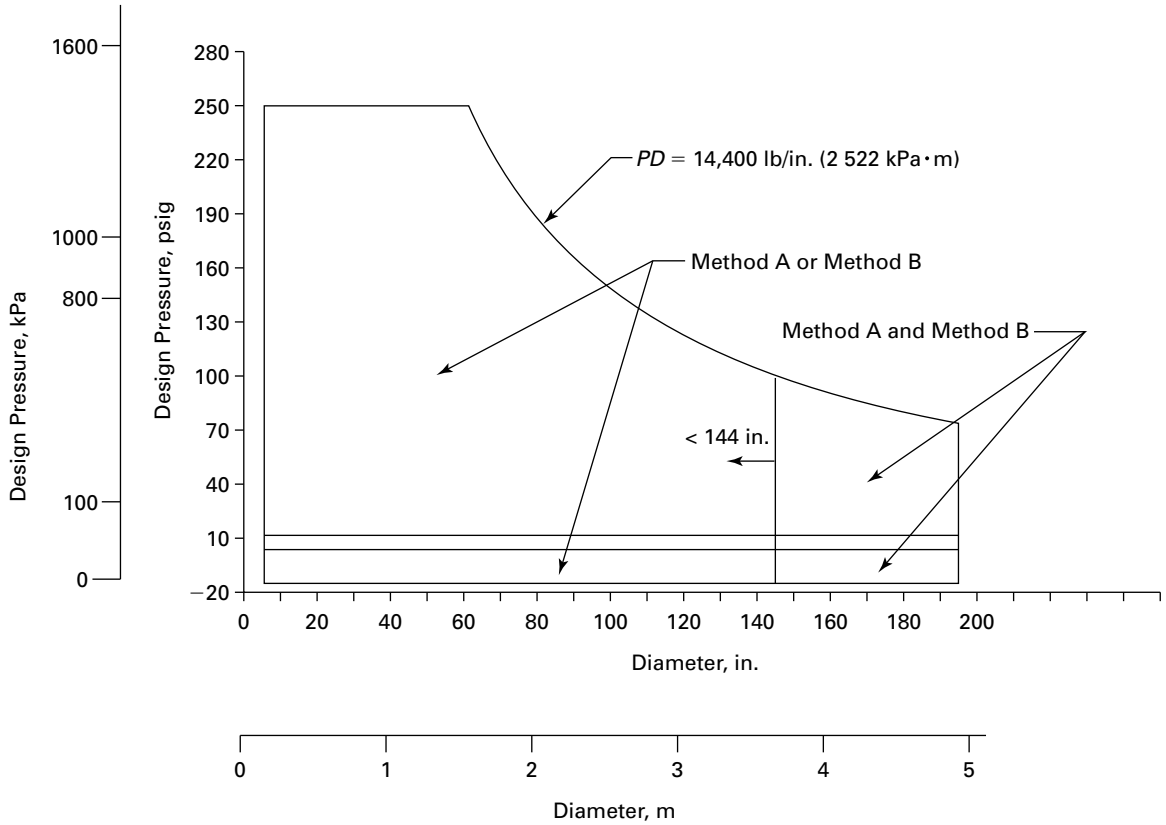

satisfy the above rules and the Fabricator's Procedure Specification regarding fabrication of both vessel parts and test coupons for determination of engineering constants.

RD-1162 FABRICATION METHODS

Class II vessels using Method A or B as the design criteria shall be limited to contact-molded construction, filament-wound construction, or a combination of the two.

(19) RD-1163 ENGINEERING CONSTANTS

Elastic constants for Class II vessel design shall be determined for the specific laminate specified in the Procedure Specification. Elastic constants for the laminate shall be determined by means of laminate theory using the orthotropic properties of the individual lamina in accordance with Article RD-12. The lamina strength constants shall be determined in accordance with Article RT-7. The lamina elastic constants shall be determined in accordance with Article RT-7 or Nonmandatory Appendix AK.

Laminate theory (Article RD-12) shall be used to determine the elastic constants of both contact-molded and filament-wound laminates.

RD-1163.1 Laminate Theory. (19) Laminate theory is a mathematical treatment of the mechanics governing the behavior of a unidirectional orthotropic lamina, and the interrelation of multiple lamina forming a multidirectional laminate. Laminate theory requires that four elastic constants and five strength constants for the orthotropic lamina be determined. The elastic constants are longitudinal, transverse, and shear modulus, and the major Poisson's ratio. The five strength constants are longitudinal tension and compression, transverse tension and compression, and the in-plane shear strength. Test methods for elastic and strength constants of the unidirectional lamina are specified in Article RT-7. Alternatively, the elastic constants of the lamina may be determined in accordance with Nonmandatory Appendix AK. The mathematical treatment to calculate the resulting stiffness coefficients is specified in Article RD-12. An example of laminate theory is given in Nonmandatory Appendix AD.

Method A requires that the laminate be treated as homogeneous and, therefore, possessing effective laminate engineering properties. For balanced, symmetric laminates, it is possible to express the effective engineering properties as a function of the stiffness constants A_{ij} and the laminate thickness. If the laminate is not

Copyright ASME International (BPVC)

symmetric, the determination of effective engineering properties is more complex, requiring the inversion of the stiffness matrix to allow expression of the laminate effective constants in terms of compliance (see Nonmandatory Appendix AD).

RD-1164 THICKNESS OF VESSEL PARTS

The design thickness of vessel parts shall be expressed both as a numerical value with appropriate units, and as a specific number of plies of specified orientation as designated in the Procedure Specifications. The Fabricator shall document as part of the Procedure Specification that the vessel part contains the specified number of plies and ply orientation.

RD-1165 RESIN–FIBER RATIO

The percent fiber for both vessel parts and test coupons shall be within the range specified by the Procedure Specification. The fiber content, by weight, of the test coupon shall be between 90% and 100% of the minimum fiber content specified for the vessel part.

RD-1166 CHARACTERIZATION OF LAMINATES

Filament-wound laminates shall be defined in terms of wind angle, number of plies, type of fiber with manufacturer's designation, type of resin with manufacturer's designation, and resin–fiber weight ratio as specified in the Procedure Specification.

Contact-molded laminates shall be defined in terms of type of fiber with manufacturer's designation, type of resin with manufacturer's designation, fiber orientation of each ply with respect to longitudinal axis of vessel or vessel part, number and sequence of various fiber configurations, and resin–fiber weight ratio as specified in the Procedure Specification.

RD-1170 DESIGN RULES — METHOD A

RD-1170.1 Scope. Laminate strength is a function of the loading combinations. The design equations specified in Method A require that the directional dependency of the laminate be considered and used. In addition, the stresses and strains of any combination of loads listed in RD-120 or the Design Specification shall be computed when such loads are expected to occur simultaneously during operation or testing. Engineering constants used with the various equations shall be consistent with the material axis under consideration. The size or thickness of vessel parts shall be such that the imposed strain does not exceed the allowable strain for the laminate in that axis.

RD-1170.2 Design Parameters.

(a) Elastic constants at design temperature shall be used for calculations.

(b) Elastic constants shall be determined as specified in RD-1163.

(c) Design factor is 5 on all external pressure calculations.

(d) Design factor is 10 on internal pressure and reinforcement calculations. This factor is incorporated in the 0.001 strain limitation.

RD-1171 THICKNESS OF SHELLS

The thickness of vessel shells under internal pressure shall not be less than that computed by the following equations. In addition, all of the loads listed in RD-120 shall be provided when such loads are specified in the Design Specification. Rules for design of vessel shells under this Section are limited to cylindrical and spherical shells. Any shell or nozzle designed under this Article shall have a minimum structural thickness of $\frac{1}{4}$ in. (6 mm).

RD-1171.1 Cylindrical Shells Under Uniform Internal Pressure. The minimum thickness of cylindrical shells under internal pressure shall be the greater of (a) or (b) below, but not less than $\frac{1}{4}$ in. (6 mm).

$$t_1 = \frac{PR}{2(0.001E_1)} \quad \text{for } \textit{longitudinal stress}$$

$$t_2 = \frac{PR}{0.001E_2} \quad \text{for } \textit{circumferential stress}$$

where

E_1 = tensile modulus in longitudinal direction
E_2 = tensile modulus in circumferential direction
P = internal pressure
R = inside radius
t_1 = structural wall thickness for longitudinal stress
t_2 = structural wall thickness for circumferential stress

RD-1171.2 Spherical Shells Under Internal Pressure. The minimum structural thickness of spherical shells under internal pressure shall be computed as follows:

$$t = \frac{PR}{2(0.001E)}$$

where

E = lesser of E_1 or E_2,
E_1 = modulus in meridional direction
E_2 = modulus in circumferential direction
P = internal pressure
R = inside radius
t = thickness of structural laminate

Copyright ASME International (BPVC)

RD-1172 VESSEL SHELLS UNDER EXTERNAL PRESSURE

Rules for design of shells under external pressure given in this section are limited to cylindrical shells, with or without stiffening rings and spherical shells.

RD-1172.1 Cylindrical Shells Under External Pressure.

The required minimum thickness of a cylindrical shell under external pressure shall be determined by the following procedure.

The maximum allowable external pressure between stiffening elements shall be computed by the following:

$$P_a = \frac{KD\ 0.8531\ \gamma\ {E_{hf}}^{3/4}\ {E_{at}}^{1/4}\ t^{5/2}}{\left(1 - \nu_x \nu_y\right)^{3/4}\ L\left(\frac{D_o}{2}\right)^{3/2} F}$$

where

D_o = outside diameter of shell, in.
E_{at} = axial tensile modulus, psi
E_{hf} = hoop flexural modulus, psi
F = design factor = 5
KD = 0.84, a knockdown factor to cover all data points using the rigorous equations
L = design length of a vessel section, in., taken as the largest of the following:
(a) the distance between head-tangent lines plus one-third the depth of each formed head, if there are no stiffening rings (excluding conical heads and sections);
(b) the distance between cone-to-cylinder junctions for vessels with cone or conical heads, if there are no stiffening rings;
(c) the greatest center-to-center distance between any two adjacent stiffening rings;
(d) the distance from the center of the first stiffening ring to the formed head tangent line plus one-third the depth of the formed head (excluding conical heads and sections), all measured parallel to the axis of the vessel;
(e) the distance from the first stiffening ring in the cylinder to the cone-to-cylinder junction.
P_a = allowable external pressure, psi
t = wall thickness, in. (nominal)
ν_x = flexural Poisson's ratio in the axial direction
ν_y = flexural Poisson's ratio in the hoop direction
γ = reduction factor developed to better correlate theoretical predictions and test results
(a) $\gamma = 1 - 0.001 Z_p$, if $Z_p \le 100$,
(b) $\gamma = 0.9$, if $Z_p > 100$
where

$$Z_p = \frac{{E_{hf}}^{3/2} {E_{at}}^{1/2}}{{E_{af}}^2}\left(1 - \nu_x \nu_y\right)^{1/2} \frac{L^2}{\left(\frac{D_o}{2} t\right)}$$

where E_{af} is the axial flexural modulus, psi

NOTE: The use of lamination theory for the prediction of ν_x and ν_y is acceptable.

For alternative rules, see Nonmandatory Appendix AI.

RD-1172.1.1 The required moment of inertia I_s of a circumferential stiffener ring for cylindrical shells under external pressure shall not be less than that determined by the following equation:

$$I_s = \left(P_o L_s {D_o}^3 F\right) / \left(24\, E_2\right)$$

where

D_o = outside diameter
E_2 = hoop tensile modulus
F = design factor = 5
L_s = one-half the distance from the center line of the stiffening ring to the next line of support on one side, plus one-half the center line distance to the next line of support on the other side of the stiffening ring, both measured parallel to the axis of the cylinder. A line of support is:
(a) a stiffening ring that meets the requirements of this paragraph;
(b) a circumferential line on a head at one-third the depth of the head from the head tangent line.
P_o = external pressure

RD-1172.2 Spherical Shells Under Uniform External Pressure.

The minimum thickness of spherical shells under external pressure shall be computed as follows.

Step 1. Assume a value of t for the structural wall thickness and compute the allowable pressure:

$$P_A = \frac{0.41\,(E/F)(t)^2}{\sqrt{3\,(1 - \nu_1\nu_2)}\,(R_o)^2}$$

where

E = smaller of E_1 and E_2,
E_1 = effective tensile modulus in meridional direction
E_2 = effective tensile modulus in circumferential direction
F = design factor = 5
P_A = allowable external pressure
R_o = outside spherical radius
t = structural wall thickness
ν_1 = Poisson's ratio in major direction
ν_2 = Poisson's ratio in minor direction

Step 2. Assume successive values of t until P_A equals or exceeds the design external pressure.

Copyright ASME International (BPVC)

Table RD-1173.2
Values of Spherical Radius Factor K_o for Ellipsoidal Heads With Pressure on Convex Side

Major-to-Minor Axis Ratio	K_o
2.0	0.9
1.8	0.81
1.6	0.73
1.4	0.65
1.2	0.57
1.0	0.50

RD-1173 THICKNESS OF HEADS

RD-1173.1 Thickness of Heads Under Internal Pressure. The required thickness of vessel heads under internal pressure shall be computed by the appropriate equation below.

$$t = \frac{PD}{2(0.001E_{hd})} \quad \text{for } \textit{ellipsoidal head}$$

$$t = \frac{PR_s}{2(0.001E_{hd})} \quad \text{for } \textit{hemispherical head}$$

where
D = inside diameter
E_{hd} = design modulus for the head
P = internal pressure
R_s = inside spherical radius
t = head wall thickness

RD-1173.2 Thickness of Heads Under External Pressure. Rules for design of end closures with pressure on the convex side given in this Section are limited to: hemispherical heads, or ellipsoidal heads with major-to-minor axis ratios not to exceed 2 to 1.

(a) Hemispherical Heads. The required thickness of a hemispherical head having pressure on the convex side shall be determined in the same manner as outlined in RD-1172.2 for determining the thickness of a spherical shell.

(b) Ellipsoidal Heads. The procedure for determining the required thickness of an ellipsoidal head under external pressure is based on the analogy between the maximum allowable compressive stress in the crown region of a head having an equivalent crown radius R_o, and the maximum allowable compressive stress in a sphere of the same radius. The radius of curvature of an ellipsoidal head varies along the meridian, allowing an average or equivalent radius based on the major-to-minor axis ratio to be used. A table of factors K_o for determining the equivalent spherical radius is given in Table RD-1173.2.

The required thickness of an ellipsoidal head under external pressure shall be determined in the same manner as outlined in RD-1172.2 using the following equation:

$$P_A = \frac{0.41\,(E/F)\,(t)^2}{\sqrt{3(1 - \nu_1\nu_2)}\,(K_o\,D_o)^2}$$

where
D_o = outside radius of crown portion of head
F = design factor = 5
K_o = factor depending on ellipsoidal head proportions

RD-1174 OPENINGS IN SHELLS AND HEADS

RD-1174.1 General. Openings in shells and heads of Class II vessels designed using Method A shall be restricted to those formed by the intersection of the shell or head with a circular cylindrical nozzle neck. The ratio of the longest chord length of the opening to the shortest chord length shall not exceed 2.

(a) For vessel diameters 48 in. (1 200 mm) and less, openings shall not exceed 50% of the vessel diameter.

(b) For vessel diameters greater than 48 in. (1 200 mm), openings shall not exceed 24 in. (600 mm).

RD-1174.2 Reinforcement of Openings and Nozzle Attachments. Attachment of nozzles to vessel shell or head requires that consideration be given to both (c) the reinforcement of the opening and (d) the secondary overlay that attaches the nozzle to the shell. The requirements for both these considerations may be incorporated into the same overlay provided the laminate comprising the cutout reinforcement on the shell is projected onto and becomes part of the secondary overlay attaching the nozzle to the shell or head.

The reinforcing pad around a nozzle opening and the projection of this overlay onto the nozzle serve two purposes

(a) It provides a reinforcing pad of sufficient thickness and length to reduce the stresses at the opening to an acceptable level.

(b) It provides sufficient shear area to secure the nozzle to the vessel.

NOTE: The secondary bond strength in shear for design purposes shall not exceed 1,000 psi (7 MPa).

Reference is made to Figure RD-1174.2. For the reinforcing pad and the nozzle overlay to be fully defined, criteria (c) through (f) below shall be met.

(c) Length of Secondary Overlay on Nozzle. The secondary bond length L_b on the nozzle shall be sufficient to withstand the internal pressure acting against the cross-sectional area of the nozzle.

Copyright ASME International (BPVC)

Figure RD-1174.2
Dimensions of Reinforcing Pad and Nozzle Overlays

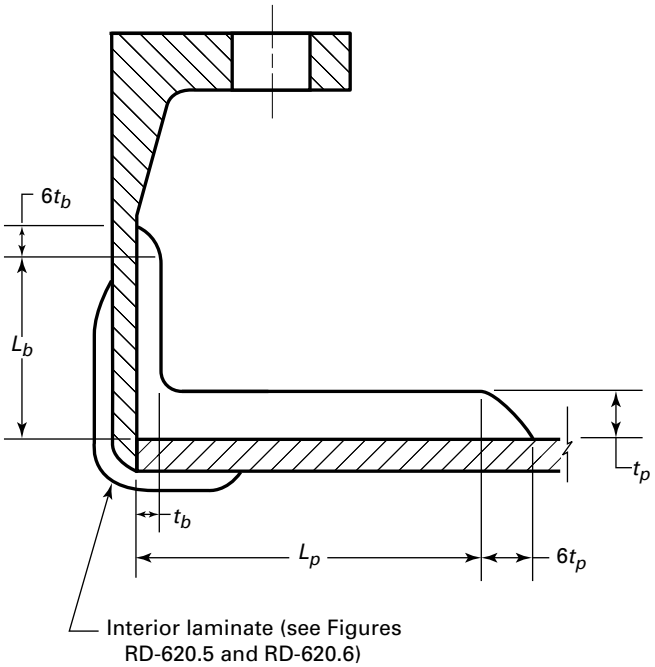

Legend:
d = inside diameter of nozzle
h_i = inside shear bond length
L_b = shear length
L_p = length of pad
t_b = overlay thickness on nozzle
t_i = inside overlay thickness
t_p = thickness of reinforcing pad

$$L_b = \frac{Pr}{2(S_s/F)} \text{ or 3 in. (75 mm), whichever is greater}$$

where
F = design factor = 10
L_b = shear length
P = internal pressure
r = inside radius of nozzle
S_s = secondary bond strength in shear [1,000 psi (6.995 MPa) max.]

(d) Thickness of Secondary Overlay on Nozzle. The secondary overlay thickness t_b on the nozzle shall be sufficient to withstand the nozzle internal pressure.

$$t_b = \frac{Pr}{S_a} \text{ or 0.25 in. (6 mm), whichever is greater}$$

where
E_1 = effective tensile modulus of secondary laminate parallel to nozzle axis
E_2 = effective tensile modulus of secondary laminate circumferential to nozzle
P = internal pressure
r = nozzle internal radius
S_a = allowable stress of secondary overlay, defined as the lower of $0.001E_1$ or $0.001E_2$
t_b = overlay thickness on nozzle

(e) Thickness of Reinforcement Pad on Shell or Head. The thickness t_p of the reinforcing pad shall be the greater of (1) and (2) below:

(1) a thickness of secondary overlay with strength equivalent to the tensile strength in the circumferential direction of the shell thickness removed:

$$t_p = \frac{PR}{0.001E_2}$$

where
E_2 = effective tensile modulus of secondary overlay in circumferential direction
P = internal pressure
R = radius of shell
t_p = thickness of reinforcing pad

Copyright ASME International (BPVC)

Figure RD-1174.3
Stress Concentration Factors for a Circular Hole in a Pressurized Cylindrical Shell

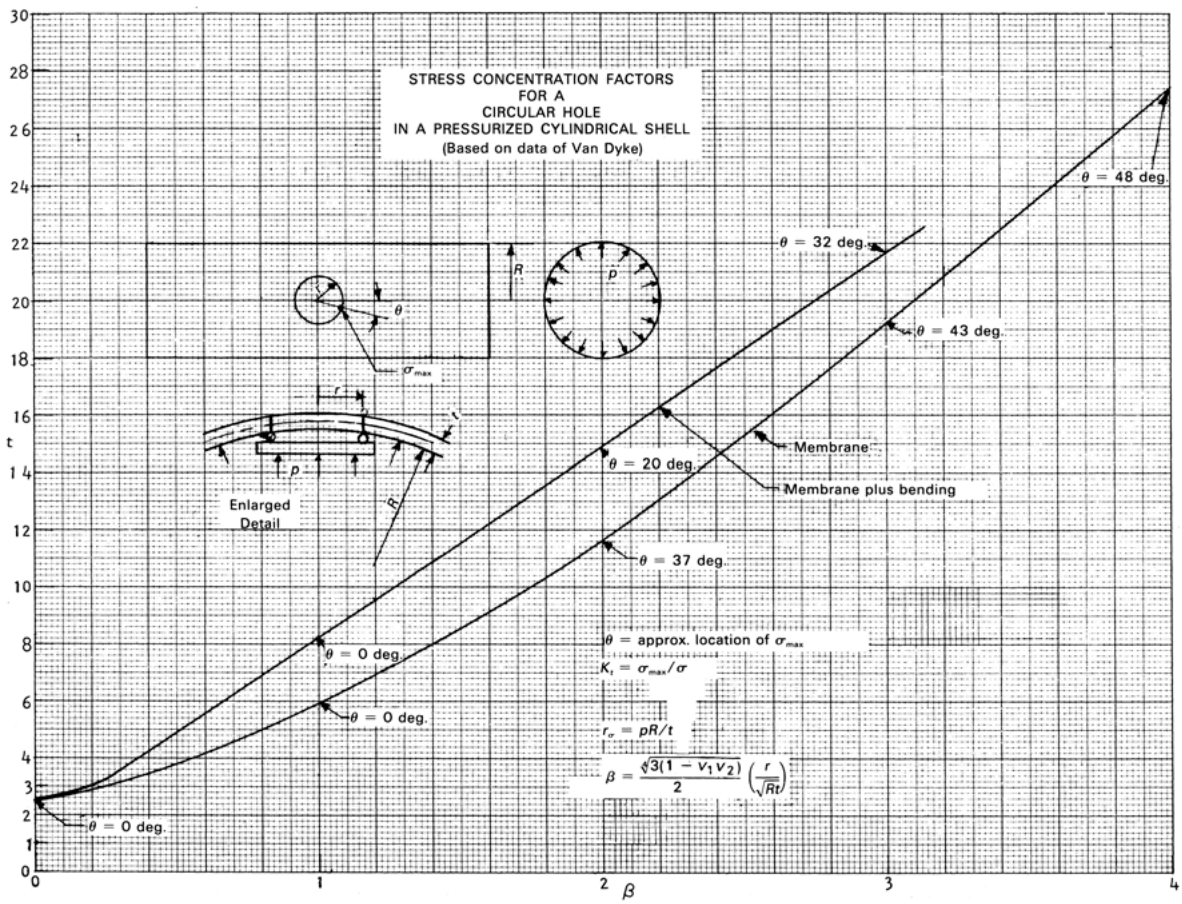

GENERAL NOTE: This figure is reprinted by permission of John Wiley & Sons, Inc., from Stress Concentration Factors by R. E. Peterson, Copyright © 1974 by John Wiley & Sons, Inc.

(2) a thickness of secondary overlay, which when added to the shell thickness, will reduce the bending stress at the opening to an allowable level. The allowable bending stress shall be defined as 0.1% of the flexural modulus of the reinforcing laminate in its circumferential direction. Compute as follows:

Step 1. Compute Beta factor

$$\beta = \frac{\sqrt[4]{3(1 - \nu_1\nu_2)}}{2}\left(\frac{r}{\sqrt{Rt}}\right)$$

where

R = radius of shell
r = radius of nozzle
t = thickness of shell
β = Beta factor
ν_1 = Poisson's ratio in major direction
ν_2 = Poisson's ratio in minor direction

Step 2. From Figure RD-1174.3, determine the stress concentration factor K_t for membrane plus bending.

Step 3. Compute maximum stress at opening

$$S_{\max} = S_2 K_t$$

where

E_2 = effective tensile modulus of the shell laminate in the circumferential direction
S_2 = allowable stress for the shell laminate in the circumferential direction, defined as $0.001E_2$

Step 4. Determine the moment M associated with the stress $S_{\max}$ being applied at the edge of the opening. Assume a moment beam 1 in. (25 mm) wide and having a thickness equal to the shell thickness, with the stress decreasing away from the edge of the opening. These assupmtions are not valid for SI units.

Copyright ASME International (BPVC)

$$M = \frac{S_{\max} t^2}{6}$$

where
t = vessel shell thickness

Step 5. Determine the thickness of reinforcement that will reduce the stress imposed by the moment M to the allowable S_f, defined as $0.001E_f$. Assume an effective equivalent moment to be $M/2$.

$$t_p = \sqrt{\frac{6(M/2)}{S_f}} - t$$

where
E_f = flexural modulus of reinforcing laminate in the circumferential direction
S_f = allowable stress, defined as $0.001E_f$,
t = thickness of vessel shell
t_p = thickness of reinforcing pad

The thickness of the reinforcing pad shall be the greater of the thicknesses computed for (1) and (2) above.

(f) Length of Reinforcing Pad. The reinforcing pad shall project a distance L_p from the edge of the opening and encompass a 360 deg arc around the opening. The distance L_p shall be at least as great as the greater of (1) and (2) below. The pad shall terminate in a taper over an additional distance six times the thickness of the pad.

(1) A secondary bond area on the shell shall provide sufficient shear area to resist the internal pressure force on the nozzle. By convention this area will be expressed in terms of a distance L_p that the reinforcing pad will extend out from the nozzle and shall be computed as follows:

$$L_p = \frac{\pi L_c P}{4S_s/F}$$

where
F = design factor = 10
L_c = longest chord length of opening
L_p = length of pad
P = internal pressure
S_s = secondary bond shear strength

(2) Minimum Reinforcing Pad Requirements

(-a) For nozzles 6 in. (150 mm) diameter and less, L_p shall be at least as great as L_c.

(-b) For nozzles greater than 6 in. (150 mm) diameter, but less than or equal to 12 in. (300 mm) diameter, L_p = 6 in. (150 mm) or $\frac{1}{2}L_c$, whichever is greater.

(-c) For nozzles greater than 12 in. (300 mm) diameter, L_p shall be at least as great as $\frac{1}{2}L_c$. See Figure RD-1174.2.

RD-1175 JOINING VESSEL PARTS

RD-1175.1 General. Joining of two or more vessel parts by use of secondary overlay requires that the overlay laminate meet two criteria:

(a) the thickness of the overlay shall be sufficient to withstand the stresses incurred by the stronger part; and

(b) the length of the overlay shall be sufficient to provide a secondary bond shear strength equal to the longitudinal tensile modulus of the weaker part.

RD-1175.2 Head-to-Shell Joint Overlay Subject to Internal Pressure (See Figure RD-1175.2).

(a) Thickness of Overlay. The thickness of the overlay t_o shall be sufficient to withstand the circumferential stress imposed on the shell due to internal pressure and specified hydrostatic loading.

$$t_o = \frac{P(R + t)}{0.001E_2}$$

where
E_2 = effective tensile modulus of secondary laminate in circumferential direction
R = radius of shell
t = thickness of shell
t_o = thickness of overlay

(b) Length of Overlay. The length of the secondary overlay L_o shall be at least that given below. The total length of the overlay extending on both sides of the joint shall be at least $2L_o$. The overlay shall terminate as a taper over an additional distance at least four times the thickness of the pad.

Sufficient secondary shear bond strength to resist internal and hydrostatic pressure is given by:

$$L_o = \frac{PR}{2S_s/F}$$

where
F = design factor = 10
L_o = length of overlay on each side of joint
P = internal pressure at joint
R = radius of vessel at joint
S_s = secondary bond strength in shear
= 1,000 psi (7 MPa) max.

RD-1176 DESIGN OF FLANGES

RD-1176.1 Nomenclature. The following symbols are used in the equations for the design of flat nozzle flanges employing a full-face gasket:

A = outside diameter of flange, in. (mm)
A_B = total cross-sectional area of bolts at root diameter of thread or section of least diameter under stress, in. (mm)

Copyright ASME International (BPVC)

Figure RD-1175.2
Head/Shell or Shell/Shell Overlay Dimensions

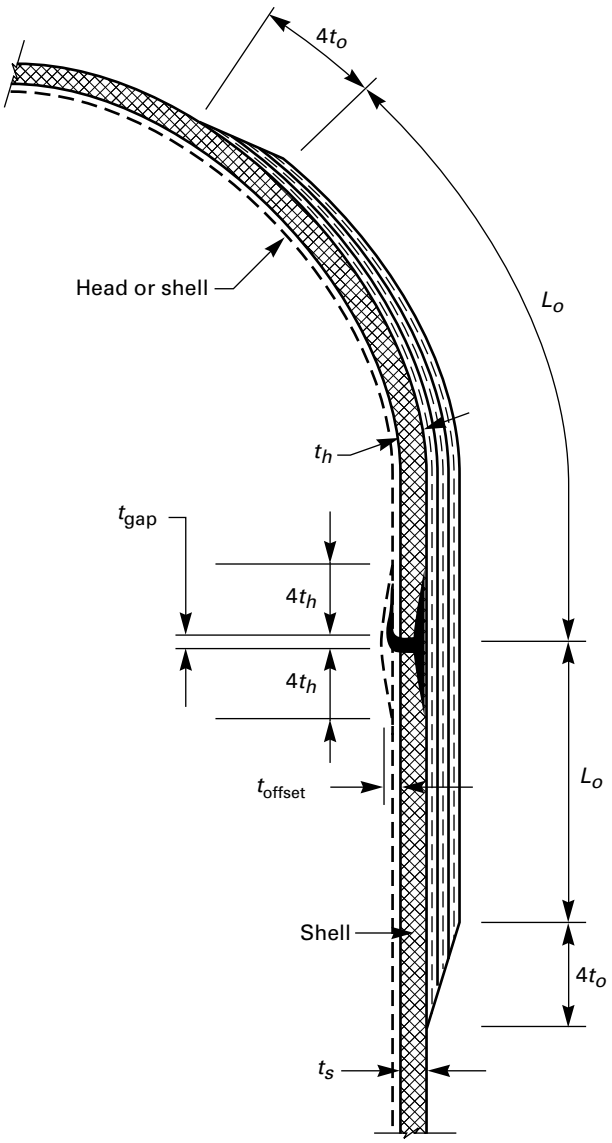

Legend:
L_o = overlay length
t_{gap} = ≤0.375 in. (10 mm)
t_n = structural head or shell thickness
t_o = overlay thickness
t_{offset} = ≥ $t_s/3$
t_s = structural shell thickness

GENERAL NOTE: The interior of the joint shall be sealed to prevent infusion of the vessel contents into the joint. In the case of a vessel with an RTP liner and where possible, it is recommended that a seal bond of a minimum of 3 in. (75 mm) (not including the taper) be used of the same construction as the RTP liner in the vessel components. In those cases where it is not possible to install a seal bond on the interior of an RTP lined vessel, the joint shall be sealed.

A_m = total required cross-sectional area of bolts, the greater of W_{m1}/S_b or W_{m2}/S_a, in.^{2} (mm^2)
B = inside diameter of flange, in. (mm)
b = effective gasket width or joint-contact-surface seating width, in. (mm)
C = diameter of bolt circle, in. (mm)
d = shape factor for integral type flanges
= $(U/V)h_o g_o{}^2$
d_1 = bolt hole diameter
e = shape factor
= F/h_o
F = shape factor (Figure RD-1176.3)
f = hub stress correction factor (Figure RD-1176.4)
= 1 for calculated values less than 1
G = diameter of gasket load reaction
g_0 = thickness of hub at small end
g_1 = thickness of hub at back of flange
H = hydrostatic end force
h = length of hub, in.
H_D = hydrostatic end force on area inside of flange
h_D = radial distance from bolt circle to circle on which H_D acts
H_G = difference between bolt load and hydrostatic end force
h_G = radial distance from bolt circle to circle on which H_G acts
h'_G = radial distance from bolt circle to gasket load reaction
h''_G = flange lever arm
H_{Gy} = bolt load for gasket yielding
= $b\pi Gy$
H'_{Gy} = compression load required to seat gasket outside G diameter
H_p = total joint-contact-surface compression load
= $2b\pi Gmp$
$H_p{}'$ = total adjusted joint-contact-surface compression for full-face gasketed flange, lb
= $(h_G/h'_G)H_p$
H_T = difference between total hydrostatic end force and the hydrostatic end force area inside of flange
= $H - H_D$
h_T = radial distance from bolt circle to circle on which H_T acts
K = ratio of inside flange diameter to outside flange diameter
M = unit load, operating, lb
= M_{max}/B
m = gasket factor
M_a = moment under bolt-up conditions
M_D = component of moment due to H_D
M_G = component of moment due to H_G
M_o = total moment
M_T = component of moment due to H_T
N = number of bolts
p = design pressure

Copyright ASME International (BPVC)

S_a = allowable bolt stress at ambient temperature
S_b = allowable bolt stress at design temperature
S_{Fa} = allowable flange stress at ambient temperature
S_{Fo} = allowable flange stress at design temperature
S_H = longitudinal hub stress
S_R = radial flange stress
S_{RAD} = radial stress at bolt circle
S_T = tangential flange stress
T = shape factor (Figure RD-1176.5)
t = flange thickness
U = shape factor (Figure RD-1176.5)
V = shape factor (Figure RD-1176.2)
W_a = flange design bolt load
W_{m1} = minimum bolt loading for design conditions
W_{m2} = minimum bolt loading for bolt-up conditions
Y = shape factor (Figure RD-1176.5)
y = gasket unit seating load
Z = shape factor (Figure RD-1176.5)

RD-1176.2 Allowable Flange Stress. The flange thickness shall be designed such that the allowable stress does not exceed 0.001 times the modulus of the laminate used to fabricate the flange. The design modulus shall be the lower of the longitudinal and transverse moduli of the flange laminate as determined by Article RT-7.

RD-1176.3 Calculation Procedure (See Figures RD-1176.1 through RD-1176.5).

(a) Determine design conditions, material properties, and dimensions of flange, bolts, and gasket.

(b) Determine the lever arms of the inner and outer parts of the gasket.

$$h_G = \frac{(C - B)(2B + C)}{6(B + C)}$$

$$h_G' = \frac{(A - C)(2A + C)}{6(C + A)}$$

(c) Determine the gasket dimensions

$$G = C - 2h_G$$

$$b = (C - B)/4$$

y = _____ (seating load)
m = _____ (gasket factor)

(d) Determine loads

$$H = G^2 \pi p/4$$

$$H_p = 2b\pi Gmp$$

$$H_p' = \left(h_G / h_p'\right) H_p$$

$$W_{m1} = H_p + H + H_p'$$

$$H_{Gy} = b\pi Gy$$

$$H_{Gy}' = (h_G / h_G')H_{Gy}$$

$$W_{m2} = H_{Gy} + H_{Gy}'$$

(e) Determine the bolting requirements

$$A_1 = W_{m1} / S_b$$

$$A_2 = W_{m2} / S_a$$

A_m = greater of A_1 and A_2
A_B = sum of cross-sectional areas of bolts

$$W_a = 0.5(A_m + A_B)S_a$$

(f) Determine flange load, moments, and lever arms

$$H_D = \pi B^2 p/4$$

$$H_T = H - H_D$$

$$h_D = R + 0.5g_1$$

$$h_T = 0.5(R + g_1 + h_G)$$

$$M_D = H_D h_D$$

$$M_T = H_T h_T$$

$$M_o = M_D + M_T$$

(g) Determine flange moment at gasket seating condition

$$H_G = W - H$$

$$h_G'' = \frac{h_G h_G'}{h_G + h_G'}$$

$$M_G = H_G h_G''$$

(h) Assume a flange thickness t.

(i) Calculate stress and compare to allowable stress (19)

$$S_{\mathrm{RAD}} = \frac{6M_G}{t^2(\pi C - Nd_1)} < \text{allowable}$$

$$S_H = f M/\lambda g_1^2 < \text{allowable}$$

$$S_R = \beta M/\lambda t^2 < \text{allowable}$$

Copyright ASME International (BPVC)

Figure RD-1176.1
Design of Full-Face Nozzle Flanges

<table>
<tr><th colspan="5">Design Conditions</th><th colspan="4">Gasket and Bolting Calculations</th></tr>
<tr><td colspan="3">Design pressure, p</td><td>psi (kPa)</td><td rowspan="2">Gasket details</td><td>G</td><td colspan="2">$C - 2h_G$</td></tr>
<tr><td colspan="3">Design temp.</td><td>°F (°C)</td><td>b</td><td colspan="2">$(C - B)/4$</td></tr>
<tr><td colspan="3">Atmospheric temp.</td><td>°F (°C)</td><td rowspan="2">Facing details</td><td>y</td><td colspan="2"></td></tr>
<tr><td colspan="3">Flange material</td><td></td><td>m</td><td colspan="2"></td></tr>
<tr><td colspan="2">Bolting material</td><td></td><td></td><td rowspan="2">$h_G = \frac{(C-B)(2B+C)}{6(B+C)} =$</td><td colspan="3" rowspan="2">$h'_G = \frac{(A-C)(2A+C)}{6(C+A)} =$</td></tr>
<tr><td>$A =$</td><td>$B =$</td><td>$C =$</td></tr>
<tr><td rowspan="2">Allowable bolt stress</td><td>Oper. temp.</td><td>S_b</td><td>psi (kPa)</td><td>$H_p = 2b\pi Gmp =$</td><td colspan="3">$H_{Gy} = b\pi Gy =$</td></tr>
<tr><td>Atm. temp.</td><td>S_a</td><td>psi (kPa)</td><td>$H = \frac{G^2 \pi p}{4} =$</td><td colspan="3" rowspan="2">$H'_{Gy} = \left(\frac{h_G}{h'_G}\right) H_{Gy} =$</td></tr>
<tr><td rowspan="2">Allowable flange stress</td><td>Oper. temp.</td><td>S_{Fo}</td><td>psi (kPa)</td><td rowspan="2">$H'_p = \left(\frac{h_G}{h'_G}\right) H_p =$</td></tr>
<tr><td>Atm. temp</td><td>S_{Fa}</td><td>psi (kPa)</td><td colspan="3" rowspan="2">$W_{m2} = H_{Gy} + H'_{Gy} =$</td></tr>
<tr><td colspan="4">$W_{m1} = H_p + H + H'_p =$</td></tr>
<tr><td>Bolting requirement</td><td colspan="3">$A_m =$ greater of $\frac{W_{m1}}{S_b}$ and $\frac{W_{m2}}{S_a} =$</td><td>$A_B =$</td><td colspan="3">$W_a = 0.5(A_m + A_B)S_a =$</td></tr>
<tr><th colspan="8">Flange Moment at Operating Conditions</th></tr>
<tr><td colspan="3">Flange Loads (Operating Condition)</td><td colspan="2">Lever Arms</td><td colspan="3">Flange Moments (Operating Condition)</td></tr>
<tr><td colspan="3">$H_D = \pi B^2 p/4 =$</td><td colspan="2">$h_D = R + 0.5g_1 =$</td><td colspan="3">$M_D = H_D \times h_D =$</td></tr>
<tr><td colspan="3">$H_T = H - H_D =$</td><td colspan="2">$h_T = 0.5(R + g_1 + h_G) =$</td><td colspan="3">$M_T = H_T \times h_T =$</td></tr>
<tr><td colspan="3"></td><td colspan="2"></td><td colspan="3">$M_o = M_D + M_T =$</td></tr>
<tr><th colspan="8">Flange Moment at Gasket Seating Conditions</th></tr>
<tr><td colspan="3">Flange Load (Bolting-up Condition)</td><td colspan="2">Lever Arm</td><td colspan="3">Flange Moment (Bolting-up Condition)</td></tr>
<tr><td colspan="3">$H_G = W_a - H =$</td><td colspan="2">$h''_G = h_G h'_G/(h_G + h'_G) =$</td><td colspan="3">$M_G = H_G \times h''_G =$</td></tr>
<tr><td colspan="5">M_{max} = greater of M_o or $M_a \times \frac{S_{Fo}}{S_{Fa}}$ (Equivalent to checking for M_o at allowable flange stress of S_{Fo} and separately for M_a at allowable flange stress of S_{Fa})</td><td colspan="3">$M = \frac{M_{max}}{B} =$</td></tr>
</table>

--`,,```,,,,,````-`-`,,`,,`,`,,`---

Copyright ASME International (BPVC)

Figure RD-1176.1
Design of Full-Face Nozzle Flanges (Cont'd)

Stress Calculation	Shape Constants		
Longitudinal hub stress $S_H = fM/\lambda g_1^2$	$K = A/B =$		$h_o = \sqrt{Bg_o} =$
Radial flange stress $S_R = \beta M/\lambda t^2$	$T =$	$=$	$h/h_o =$
Tangential flange stress $S_T = (MY/t^2) \quad ZS_R$	$Z =$	$=$	$F =$
Greater of 0.5 $(S_H + S_R)$ or $0.5(S_H + S_T)$	$Y =$	$=$	$V =$
Radial stress at bolt circle $S_{RAD} = \dfrac{6M_G}{t^2(\pi C - Nd_1)}$	$U =$	$=$	$f =$
	$g_1/g_o =$		$e = F/h_o$

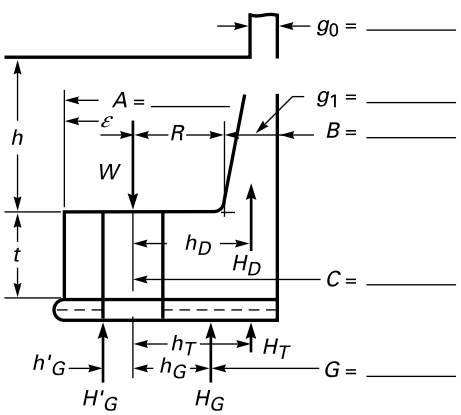

$d = \dfrac{U}{V} h_o g_o^2 =$

t (assumed)			
$\alpha = te + 1$			
$\beta = {}^4/_3 te + 1$			
$\gamma = \alpha/T$			
$\delta = t^3/d$			
$\lambda = \gamma + \delta$			

N = No. bolts = _____
d_1 = Dia. bolt holes = _____

Copyright ASME International (BPVC)

Figure RD-1176.2
Values of *V*
(Integral Flange Factor)

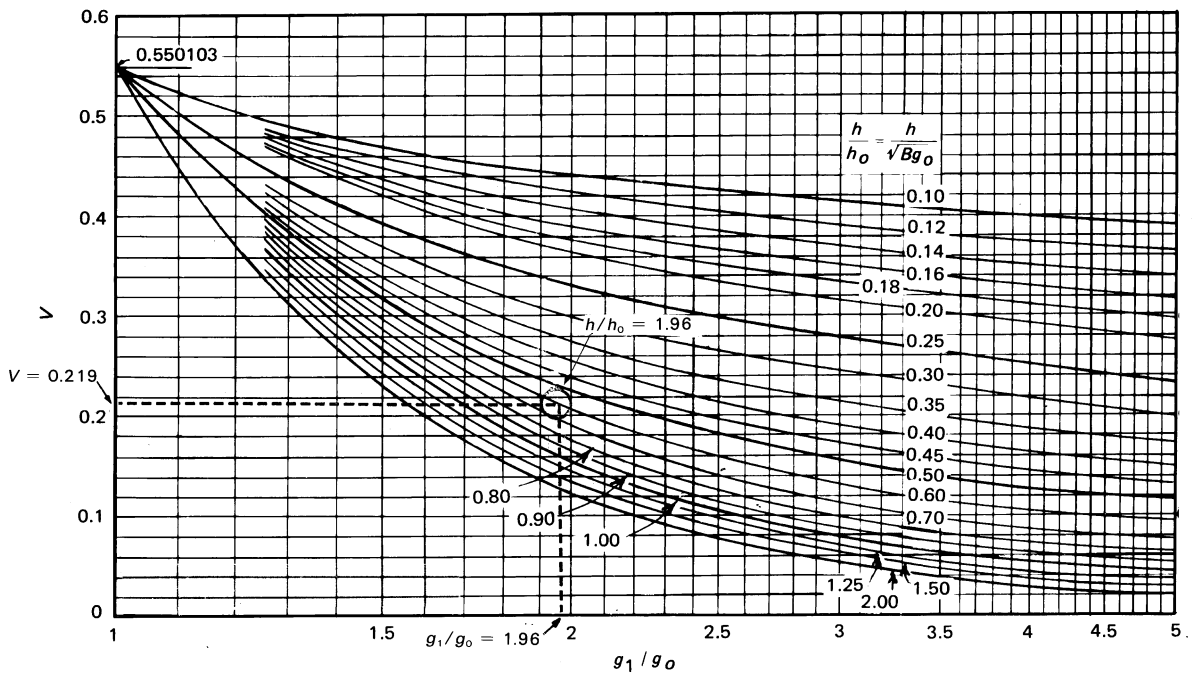

Copyright ASME International (BPVC)

Figure RD-1176.3
Values of *F*
(Integral Flange Factor)

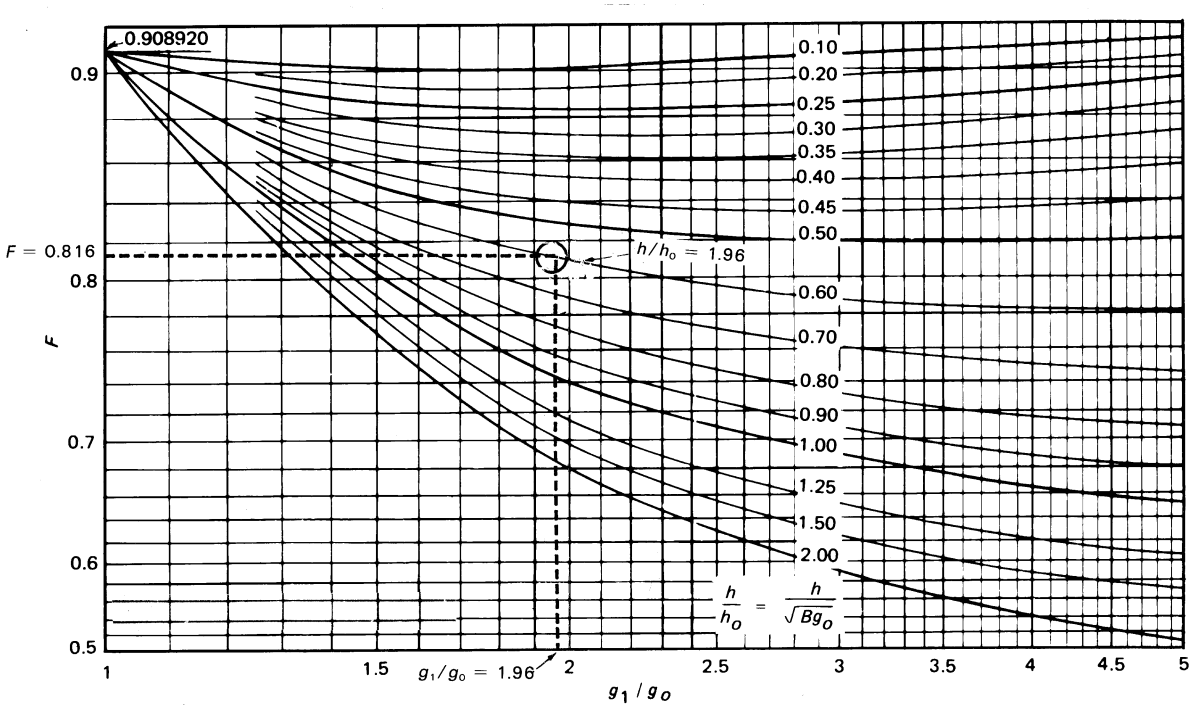

Copyright ASME International (BPVC)

Figure RD-1176.4
Values of *f*
(Hub Stress Correction Factor)

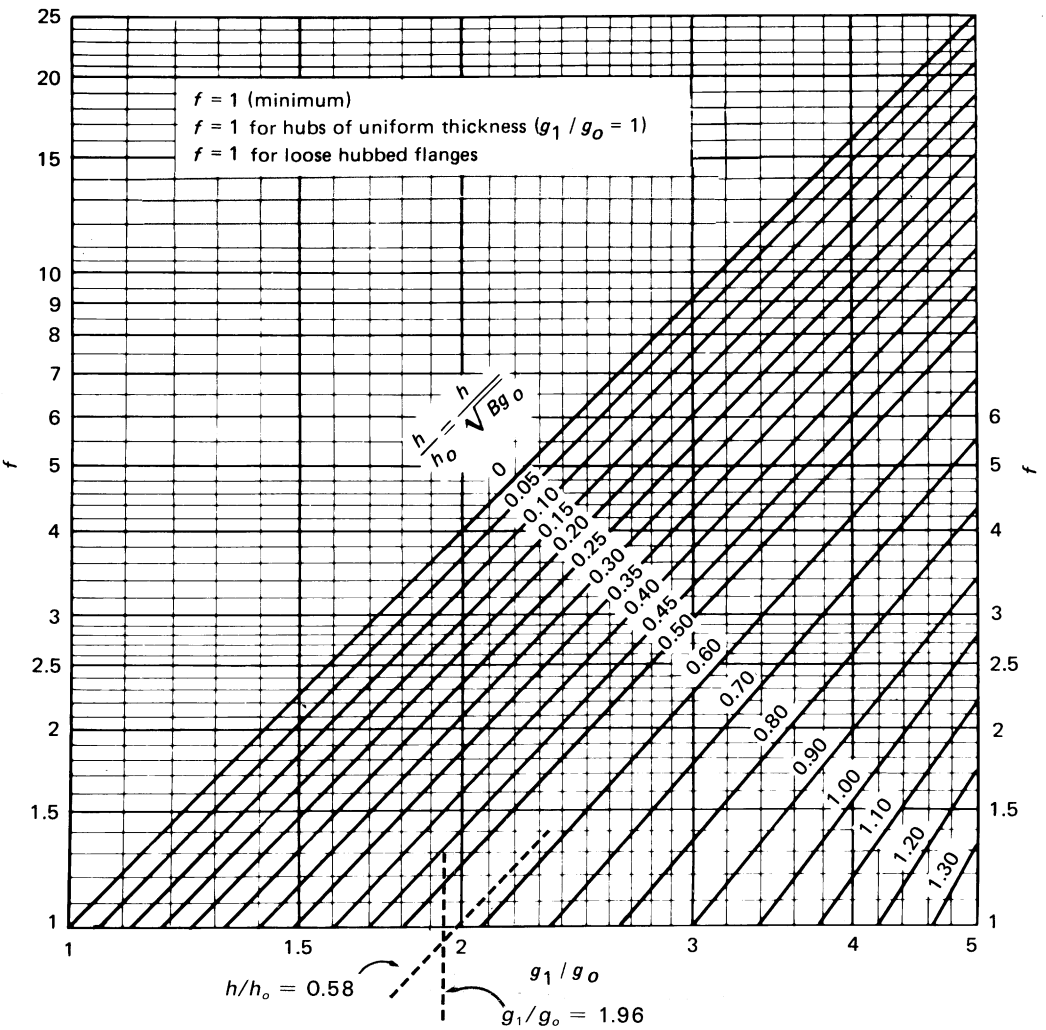

Copyright ASME International (BPVC)

Figure RD-1176.5
Values of *T*, *Z*, *Y*, and *U*
(Terms Involving *K*)

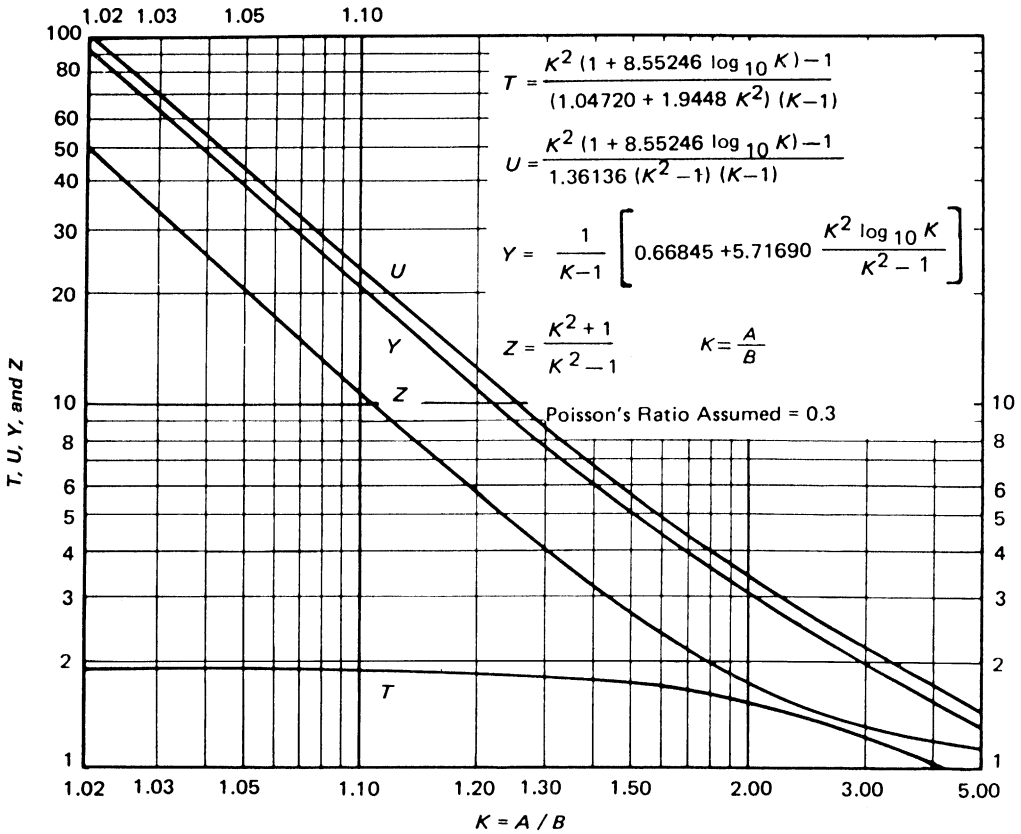

$$S_T = \left(MY/t^2\right) - ZS_R < \text{allowable}$$

where

$M = M_{max}/B$

RD-1180 DISCONTINUITY ANALYSIS — METHOD B

RD-1180.1 Scope. Design to Method B requires detailed stress analysis and evaluation of the results of this analysis against the quadratic interaction strength criterion or the quadratic interaction damage criterion. The stress analysis and evaluation shall include the directional properties of the laminate and individual lamina and shall take into account primary and secondary stresses caused by gross structural discontinuities.

(19) **RD-1180.2 Design Parameters.**

(a) Elastic constants at design temperature(s) shall be used for calculations.

(b) Elastic constants of the laminate for use in Method B shall be determined as specified in RD-1163.

(c) The lamina strength constants shall be determined in accordance with Article RT-7. The lamina elastic constants shall be determined in accordance with Article RT-7 or Nonmandatory Appendix AK.

RD-1181 DEFINITIONS

(a) Gross structural discontinuity is defined as a source of stress or strain intensification which affects a relatively large portion of a structure and has a significant effect on the overall stress or strain pattern or on the structure as a whole.

Examples of gross structural discontinuities are head-to-shell and flange-to-shell junctions, nozzles, and junctions between shells of different diameters or thickness.

(b) Local structural discontinuity is defined as a source of stress or strain intensification which affects a relatively small volume of material and does not have a significant effect on the overall stress or strain pattern or on the structure as a whole.

Copyright ASME International (BPVC)

Examples are small fillet radii and small attachments.

RD-1182 STRESS ANALYSIS

A detailed stress analysis is required for all vessels designed to Method B. The linear elastic stress analysis shall include the effect of gross structural discontinuities. Primary and secondary, normal and shear, and general and local thermal stress shall be calculated for all lamina. The effect of local structural discontinuities need not be considered provided that all fillet radii are $\frac{1}{2}$ in. (13 mm) or greater.

Analysis of the vessel under internal pressure is required. In addition, the stresses and strains caused by any combination of the loads listed in RD-120 and in the Design Specification shall be computed when such loads are expected to occur simultaneously during normal operation or testing of the vessel. All possible load combinations shall be considered. Stresses and strains shall be determined from an analysis of the vessel under combined loads or by superposition of results from analyses of specific load combinations. Stress analysis of pressure vessels is complex and will normally require the use of a general-purpose computer program. Such programs will typically be based on finite element, finite difference, or stiffness analysis techniques. Such programs shall take into account the anisotropic properties of the laminate.

RD-1182.1 Discontinuity Analysis.

(a) The analysis of pressure vessels containing discontinuity areas shall be performed in a standard manner similar to the analysis of any statically indeterminate structure. The analysis is initiated by separating the vessel into shell elements of simple geometry (such as rings, cylinders, etc.) of which the structural behavior is known. The pressure, mechanical, and thermal loads acting on the structure shall be applied to the shell elements with a system of forces required to maintain the static equilibrium of each element. These loads and forces cause individual element deformations, which in general are not equal at the adjoining edges. The deformations at an element's edge are defined as:

(1) radial displacement

(2) rotation of meridian tangent

A redundant moment and shear force must exist on the edges of the elements in order to have compatibility of deformations and restore continuity in the structure.

(b) At each juncture discontinuity, two equations shall be written which express the equality of the combined deformations due to all the applied loads and the redundant forces and moments.

One equation expresses the equality of rotation; the other equation expresses the equality of displacement of the adjacent elements. The resulting system of simultaneous equations shall be solved to obtain the redundant moment and shear force at each juncture.

RD-1182.2 Procedure for Discontinuity Analysis.

The following are the basic steps to follow for determining the redundant shear and moment that may exist at a pressure vessel discontinuity.

(a) Separate the vessel into individual shell elements at locations of discontinuity.

(b) Calculate the edge deformations of each element caused by a unity shear force and a unit moment at each edge. These values are known as *influence coefficients*.

The deformations due to local discontinuity shall be included in the calculation of these coefficients as follows:

(c) Calculate the edge deformations of each element caused by loads other than redundant loads.

(d) Calculate the edge deformations of each element caused by the temperature distributions.

(e) At each juncture of two elements, equate the total radial displacements and the total rotations of each element.

(f) Solve the final system of simultaneous equations for the redundant shears and moments.

RD-1182.3 Examples of Discontinuity Analysis.

Examples of discontinuity stress analysis for general and specific geometries are contained in Articles AC-1 through AC-4. These examples are for vessels without openings and fabricated from a single lamina of isotropic material. For vessels with openings, complex geometries, or anisotropic materials of construction, hand calculations become extremely difficult and computer-based analysis methods are normally used.

RD-1183 EXTERNAL PRESSURE AND BUCKLING

The stress distributions resulting from external pressure or from loads which cause compressive stresses shall satisfy the criteria of RD-1187 through RD-1189. In addition, the calculated minimum buckling pressure or load of the vessel shall be at least five times the design external pressure or design load. The buckling pressure shall be calculated using elastic properties at the maximum specified operating temperature which may occur when the external pressure is applied. For domed heads and cylindrical and spherical shells fabricated of isotropic laminates, the minimum buckling requirement shall be met by using the rules of RD-1172 and RD-1173.

Many vessels are fabricated with anisotropic laminates. Anisotropy has a strong influence on elastic stability and shall be considered in Design Calculations.

RD-1184 OPENINGS AND JOINTS OF VESSEL PARTS

Method B requires stress analysis of openings, nozzles, and joints of vessel parts. Overlaps and reinforcing pads shall be included in such analysis. Particular care shall be taken to accurately determine shear stresses between the

Copyright ASME International (BPVC)

vessel and overlaps, and between the vessel and reinforcing pads.

Reinforcement and overlays for nozzles and openings may be designed according to the rules given in RD-1174, provided that the openings meet the requirements of RD-1174.1 and the design strain criteria requirements of Method A. In this case the provisions of RD-1120(b) shall apply.

RD-1185 THERMAL STRESSES

(a) Thermal stresses occur in a vessel, or part of a vessel, when thermal displacements (expansions or contractions) which would otherwise freely occur are partially or completely restrained.

(b) Thermal displacements may be induced by temperature distributions caused by heat transfer and internal heat generation.

The modulus of elasticity and the coefficient of thermal expansion for each lamina may be taken as constant at their instantaneous values for the average temperature range under consideration.

If the lower limit of the temperature range is ambient, the instantaneous value of the coefficient of thermal expansion for the average temperature coincides with the mean coefficient of thermal expansion.

During transient conditions, the temperature distribution and thermal stresses vary with time. The analysis, therefore, requires consideration of the thermal stresses as a function of time during the transient conditions.

RD-1186 ATTACHMENTS

Internal and external attachments [RD-1150(e)] shall be designed by stress analysis. The effect of local structural discontinuities due to small attachments need not be included in the stress analysis of the vessel if in the opinion of the registered Professional Engineer they are not significant.

RD-1187 DESIGN ACCEPTABILITY

The requirements for an acceptable design are:

(a) the design shall be such that the stress at any point in the vessel shall not exceed the limits stated in RD-1189;

(b) for configurations where compressive stress occurs, design shall meet the requirements of RD-1183;

(c) the average shear stress between the vessel and overlays (reinforcing pads, nozzle overlays, overlays joining vessel parts, etc.) shall not exceed 200 psi (1.5 MPa);

(d) interlaminar shear between shell lamina need not be considered.

RD-1188 BASIS FOR DETERMINING STRESSES

RD-1188.1 Quadratic Interaction Strength Criterion and Quadratic Interaction Damage Criterion. The quadratic interaction criteria are used with the stiffness coefficients calculated according to Article RD-12 and the stress resultants calculated according to RD-1180 through RD-1186. The criteria determine whether the stress intensities at a point are within the permissible range.

Details of the quadratic interaction strength criterion are given in RD-1188.2 through RD-1188.5, and details of the quadratic interaction damage criterion are given in RD-1188.6 through RD-1188.8.

RD-1188.2 Mathematical Statement of the Quadratic Interaction Strength Criterion. In general, a lamina has five independent uniaxial ultimate strengths: tensile and compressive strengths in the principal direction of greater strength, tensile and compressive strengths in the direction of lesser strength, and shear strength with respect to a pure shear stress in the principal directions. All mat lamina are treated as isotropic and the strengths in all directions are the same. In laminates containing unidirectional continuous roving, the principal direction of greater strength is aligned with the continuous roving, and the principal direction of lesser strength is perpendicular to the roving. Further, the five strength values may be unequal.

The quadratic interaction criterion defines the interactions between the five strengths in cases when more than one component of stress is applied to the lamina, and it defines allowable stress states in terms of the strengths.

The criterion is applied to each lamina separately, and if one or more lamina fail the criterion, the corresponding load on the vessel is not allowed. The criterion is applied separately to each combination of stress or stresses and moment resultants calculated by the rules of RD-1182. In the following paragraphs it is assumed that the laminate stiffness coefficients and stress and moment resultants have already been calculated for all sections and load combinations under consideration.

RD-1188.3 Nomenclature. In addition to the nomenclature defined in Article RD-12, the following symbols are used:

F_{xx}, F_{xy}, F_{yy}, F_{ss}, F_x, F_y = strength parameters defined in terms of the five strengths

R = strength criterion stress ratio = 6

S = ultimate shear strength with respect to shear stress in the x–y plane

S_{ij} = the ij component of the compliance matrix (the compliance matrix is the inverse of the stiffness matrix)

Copyright ASME International (BPVC)

w = parameter which equals 1 for the upper surface of a lamina and −1 for the lower
X = ultimate tensile strength of a lamina in the x (strong) direction
X_c = ultimate compressive strength of a lamina in the x direction
Y = ultimate tensile strength of a lamina in the y (weak) direction
Y_c = ultimate compressive strength of a lamina in the y direction

RD-1188.4 Lamina Stresses and Strains. The first step in using the quadratic interaction criterion is to compute the upper and lower surface strains in each lamina. The strains are computed from the reference surface strains and curvatures, which are obtained from the force and moment resultants by eqs. (1) through (6).

$$\epsilon_1^\circ = S_{11}N_1 + S_{12}N_2 + S_{13}N_6 + S_{14}M_1 + S_{15}M_2 + S_{16}M_6 \quad (1)$$

$$\epsilon_2^\circ = S_{12}N_1 + S_{22}N_2 + S_{23}N_6 + S_{24}M_1 + S_{25}M_2 + S_{26}M_6 \quad (2)$$

$$\epsilon_6^\circ = S_{13}N_1 + S_{23}N_2 + S_{33}N_6 + S_{34}M_1 + S_{35}M_2 + S_{36}M_6 \quad (3)$$

$$K_1 = S_{14}N_1 + S_{24}N_2 + S_{34}N_6 + S_{44}M_1 + S_{45}M_2 + S_{46}M_6 \quad (4)$$

$$K_2 = S_{15}N_1 + S_{25}N_2 + S_{35}N_6 + S_{45}M_1 + S_{55}M_2 + S_{56}M_6 \quad (5)$$

$$K_6 = S_{16}N_1 + S_{26}N_2 + S_{36}N_6 + S_{46}M_1 + S_{56}M_2 + S_{66}M_6 \quad (6)$$

The upper and lower surface strains in the vessel coordinate system are then obtained from:

$$(\epsilon_1)_k = \epsilon_1^\circ + \left(Z_k + \frac{Wt_k}{2}\right)K_1 \quad (7)$$

$$(\epsilon_2)_k = \epsilon_2^\circ + \left(Z_k + \frac{Wt_k}{2}\right)K_2 \quad (8)$$

$$(\epsilon_3)_k = \epsilon_3^\circ + \left(Z_k + \frac{Wt_k}{2}\right)K_6 \quad (9)$$

Equations (7), (8), and (9) give strains at the upper surface of the lamina when $w = 1$, and lower surface strains when $w = -1$. The corresponding stresses are then calculated from the strains and the reduced stiffnesses in the vessel coordinates, as follows:

$$(\sigma_1)_k = Q_{11}(\epsilon_1)_k + Q_{12}(\epsilon_2)_k + Q_{16}(\epsilon_6)_k \quad (10)$$

$$(\sigma_2)_k = Q_{12}(\epsilon_1)_k + Q_{22}(\epsilon_2)_k + Q_{26}(\epsilon_6)_k \quad (11)$$

$$(\sigma_6)_k = Q_{16}(\epsilon_1)_k + Q_{26}(\epsilon_2)_k + Q_{66}(\epsilon_6)_k \quad (12)$$

The final step in calculating the stresses is to express the vessel coordinate lamina stress components in terms of the principal material coordinate, in each of the lamina. The so-called on-axis components of stress are given by the usual transformation equations:

$$(\sigma_x)_k = (\sigma_1)_k m_k^2 + (\sigma_2)_k n_k^2 - 2(\sigma_6)_k m_k n_k \quad (13)$$

$$(\sigma_y)_k = (\sigma_1)_k m_k^2 + (\sigma_2)_k n_k^2 + 2(\sigma_6)_k m_k n_k \quad (14)$$

$$(\sigma_s)_k = \left[-(\sigma_1)_k + (\sigma_2)_k\right]m_k n_k + (\sigma_6)_k\left(m_k^2 - n_k^2\right) \quad (15)$$

RD-1188.5 The Quadratic Interaction Strength Criterion. The quadratic interaction criterion required by this Section is:

$$R^2\left(F_{xx}\sigma_x^2 + 2F_{xy}\sigma_x\sigma_y + F_{yy}\sigma_y^2 + F_{ss}\sigma_s^2\right) + R\left(F_x\sigma_x + F_y\sigma_y\right) - 1 = 0 \quad (16)$$

where
$F_{ss} = 1/S^2$
$F_x = 1/X - 1/X_c$
$F_{xx} = 1/XX_c$
$F_{xy} = F_{xy}^*\sqrt{F_{xx}F_{yy}}$, with F_{xy}^* taken to be $-\frac{1}{2}$
$F_y = 1/Y - 1/Y_c$
$F_{yy} = 1/YY_c$

If the applied stress components lead to $R = 1$, then the lamina will fail. If $R > 1$, the lamina will not fail. In the case of a laminate isotropic in both strength and stiffness, R reduces to the "safety factor" or the "design factor."

The terms in the parentheses in eq. (16) contain the five strength properties and the on-axis stress components of a lamina, which are known, and thus eq. (16) can be solved for R. Let

Copyright ASME International (BPVC)

$$G = F_{xx}\sigma_x^2 + 2F_{xy}\sigma_x\sigma_y + F_{yy}\sigma_y^2 + F_{ss}\sigma_s^2$$

$$H = F_x\sigma_x + F_y\sigma_y$$

Then the solution for R is the positive of the two values given by

$$R = \frac{-H \pm \sqrt{H^2 + 4G}}{2G} \quad (17)$$

For each stress state under consideration, R shall be equal to or greater than the value required by RD-1189.

As a special case for laminates which are isotropic in both stiffness and strength, the quadratic interaction criterion reduces to

$$R = \frac{X}{\left(\sigma_x^2 - \sigma_x\sigma_y + \sigma_y^2 + X^2/S^2\sigma_s^2\right)^{1/2}} \quad (18)$$

Equation (18) computes R as a function of the stresses at the point under consideration and the ultimate tensile strength of the laminate. It will be recognized that R is the safety factor. The stress ratio is a generalization of the safety factor when the lamina has orthotropic strength properties.

RD-1188.6 Description of the Quadratic Interaction Damage Criterion. The mathematical basis of the quadratic interaction damage criterion is the same as that given in RD-1188.2 for the quadratic interaction strength criterion.

The damage criterion uses the stress values determined by Article RT-8 in place of the ultimate tensile, compressive, and shear stress values used for the strength criterion. For contact-molded and filament-wound lamina, the stress values shall be obtained according to Article RT-8. For contact-molded lamina, flexural and shear tests are required. The stress values for a filament-wound lamina are obtained from tests of a filament-wound cylinder. Tensile and compressive values are assumed to have the same value for both contact-molded and filament-wound laminae.

The damage based design criterion corresponds to the onset of significant structural damage in the laminate. Tests have shown that onset of significant emission from a laminate can be used as an approximate measure of the endurance limit of the laminate under the same loading. The damage based design criterion is not the same as, and is not related to, the stress at first cracking of the laminate.

Lamina stresses and strains shall be calculated as set out in RD-1188.4.

RD-1188.7 Nomenclature. The following additional symbols are used for the quadratic interaction damage criterion.

R_d = damage criterion stress ratio = 1.25
S_d = damage-based design value with respect to shear stress in the x–y plane
X_d = tensile and compressive damage-based design value in the x (strong) direction
Y_d = tensile and compressive damage-based design value in the y (weak) direction
Ψ = damage criterion design factor

RD-1188.8 The Quadratic Interaction Damage Criterion. The quadratic interaction criterion required by this Section is

$$\frac{R_d^2}{\Psi^2}\left\{\left(\frac{\sigma_x}{X_d}\right)^2 - \frac{\sigma_x\sigma_y}{X_dY_d} + \left(\frac{\sigma_y}{Y_d}\right)^2 + \left(\frac{\sigma_s}{S_d}\right)^2\right\} \leqq 1 \quad (19)$$

The damage criterion design factor compensates for approximations in the test technique used to determine damage based design values. The damage criterion design factor shall be taken as 0.75.

The computation set out in RD-1188.5 and RD-1189(a) through RD-1189(e) shall be performed. Each lamina shall be evaluated against the criterion expressed by eq. (19).

RD-1189 PROCEDURE FOR CALCULATING THE STRESS RATIO

For the quadratic interaction strength criterion, eqs. RD-1188.5(16) and RD-1188.5(17) [and eq. RD-1188.5(18) as a special case] in RD-1188.5 define the stress ratio. For the quadratic interaction damage criterion, eq. RD-1188.8(19) defines the stress ratio. The stress ratio is an extension of the concept of design factor to laminates which require five independent constants to define their strength, rather than the single independent strength of an isotropic material. If the state of stress at any point in any lamina comprising a portion of a pressure-containing part of the vessel results in a stress ratio of less than that defined in RD-1188.3 for design to the quadratic interaction strength criterion, or RD-1188.7 for design to the quadratic interaction damage criterion, then the state of stress is excessive and the corresponding load is not allowed. The stress ratio shall be at least the defined value for each load combination required by RD-1182, and at every point in the pressure-containing parts of the vessel.

The following computation shall be performed for each set of superposed stress resultants required by RD-1182. The referenced equations are given in RD-1188.

(a) Compute the reference surface strains, curvatures, and twist using eqs. RD-1188.4(1) through RD-1188.4(6). These are in the vessel coordinates.

(b) For the upper and lower surface of each lamina, calculate the strains in vessel coordinates using eqs. RD-1188.4(7) through RD-1188.4(9).

Copyright ASME International (BPVC)

(c) Calculate the stresses in vessel coordinates at the upper and lower surface of each lamina from the results of (b) above using eqs. RD-1188.4(10) through RD-1188.4(12).

(d) Transform the stresses computed in (c) above to on-axis coordinates using eqs. RD-1188.4(13) through RD-1188.4(15). Each lamina may have a different *k*.

(e) Calculate the stress ratio for each lamina using eqs. RD-1188.5(16) and RD-1188.5(17), or eq. RD-1188.8(19).

Copyright ASME International (BPVC)

ARTICLE RD-12
LAMINATE STIFFNESS COEFFICIENTS

RD-1200 LAMINATE STIFFNESS COEFFICIENTS

For purposes of this Section, laminate theory is a mathematical treatment of the mechanics of laminate constructed of plies with unidirectional fiber reinforcement, plies of isotropic material, or an arbitrary combination of the two.

Article RD-12 provides a set of equations, derived by laminate theory, which shall be used to compute the elastic stiffness coefficients needed to perform design by stress analysis, as specified in RD-1163.

Other valid statements of laminate theory may be used in place of the equations herein, but it is the responsibility of the registered Professional Engineer to show that the equations reduce to the equations below.

The laminate analysis method consists of determining the physical and mechanical properties of each layer of a laminate and uses weighted averaging techniques to determine the physical and mechanical properties of the total laminate.

Calculation of laminate properties according to Article RD-12 is required.

RD-1210 STIFFNESS COEFFICIENTS FOR DESIGN BY METHOD B RULES

This Article gives the equations required for calculating the stiffness coefficients needed to design vessel parts according to Method B design rules.

Other valid statements of laminate analysis may be used in place of the equations herein, but it is the responsibility of the registered Professional Engineer to show that they can be mathematically derived from the equations herein.

RD-1220 NOMENCLATURE

The symbols used in this Article are defined below.

$(Q_{ij})_k$ = transformed reduced stiffness of the kth layer

A_{ij} = extensional stiffness coefficients defined by eq. RD-1240(28); i, j = 1, 2, 6

B_{ij} = coupling stiffness coefficients defined by eq. RD-1240(30); i, j = 1, 2, 6

D_{ij} = bending stiffness coefficients defined by eq. RD-1240(29); i, j = 1, 2, 6

Ef_1 = effective flexural modulus of the laminate in the longitudinal off-axis direction

Ef_2 = effective flexural modulus of the laminate in the transverse (hoop) off-axis direction

E_s = shear modulus of an orthotropic lamina in the principal coordinates

E_x = Young's modulus of an orthotropic lamina in the principal direction of the greater modulus

E_y = Young's modulus of an orthotropic lamina in the principal direction of the lesser modulus

K_x = midplane curvature in the x direction

K_{xy} = midplane twist

K_y = midplane curvature in the y direction

M_1 = moment resultant about x axis (Figure RD-1220.1)

M_2 = moment resultant about y axis (Figure RD-1220.1)

M_6 = twisting resultant (Figure RD-1220.2)

N_1 = force resultant in x direction (Figure RD-1220.2)

N_2 = force resultant in y direction (Figure RD-1220.2)

N_6 = in-plane shear force resultant (Figure RD-1220.2)

Q_{ij} = reduced stiffness transformed to the vessel (x–y) axes (off-axes directions); i, j = 1, 2, 6

Q_{xx}, Q_{xy}, Q_{yy}, Q_{ss} = reduced stiffness in the principal material direction, defined by eqs. RD-1230(4) through RD-1230(8) (on-axis directions)

t_k = thickness of the kth layer

Z_k = distance from the reference surface to the center of the kth layer

θ = angle between the x coordinate axis and the 1 coordinate axis (see Figures RD-1220.1, RD-1220.2, and RD-1220.3)

ν_x = principal Poisson's ratio of a lamina. It is the negative of strain in the 2 direction from stress in the 1 direction.

σ_i = normal stress in the i direction

σ_s, σ_6 = shear stress in the i–j coordinate system

ϵ_i = normal strain of a layer in the i direction

ϵ_i^* = midplane normal strain in direction i of the laminate

ϵ_6, ϵ_s = shear strain in the i–j coordinate system of a layer

ϵ_6^*, ϵ_s^* = midplane shear strain of the laminate

Copyright ASME International (BPVC)

Figure RD-1220.1
Moment Resultants

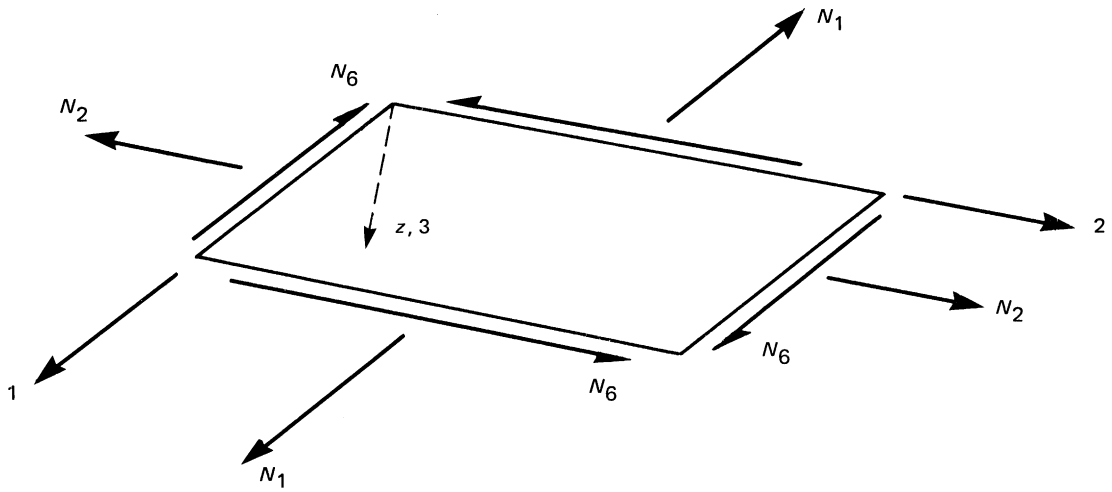

Figure RD-1220.2
In-Plane Force Resultants

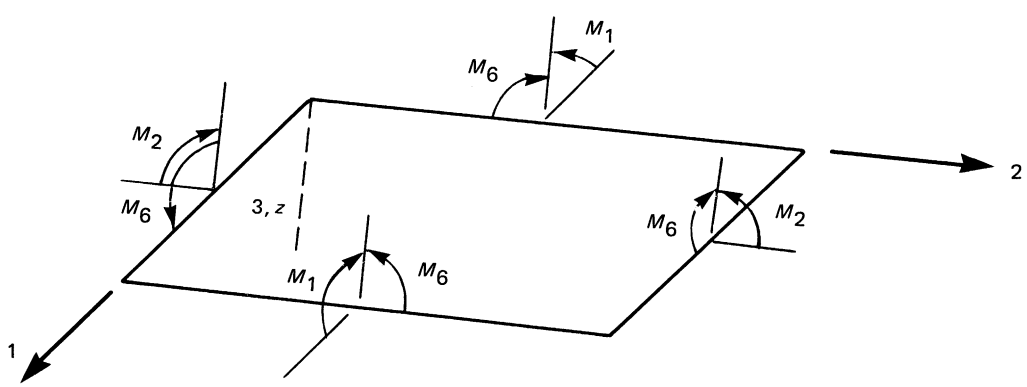

Copyright ASME International (BPVC)

Figure RD-1220.3
Coordinate Systems

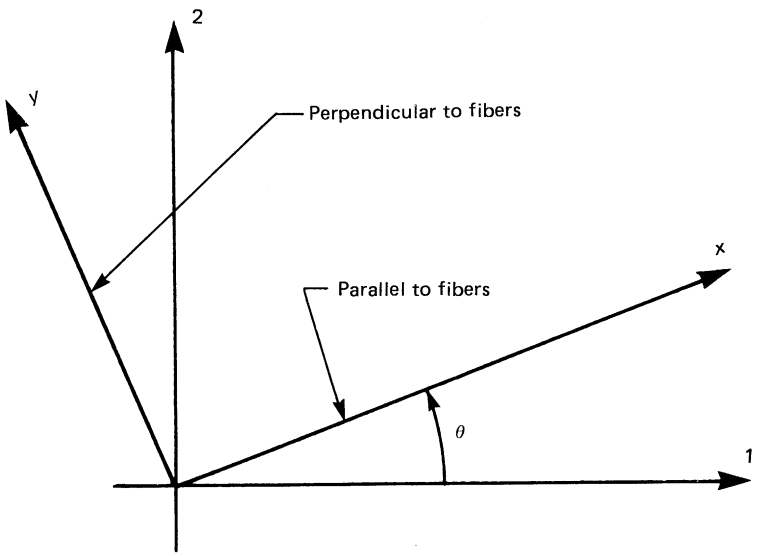

GENERAL NOTES:
(a) The 1–2 coordinates are called off-axis or vessel coordinates.
(b) The *x*–*y* coordinates are called on-axis or principal material coordinates.

(19) RD-1230 LAMINA REDUCED STIFFNESS

The stress–strain relations in the principal material directions of an orthotropic lamina are as follows:

$$\sigma_x = Q_{xx}\,\epsilon_x + Q_{xy}\,\epsilon_y \quad (1)$$

$$\sigma_y = Q_{xy}\,\epsilon_x + Q_{yy}\,\epsilon_y \quad (2)$$

$$\sigma_s = Q_{ss}\,\epsilon_s \quad (3)$$

The reduced stiffnesses of a lamina are calculated from the elastic properties, E_x, E_y, ν_x, and E_s. These properties shall be determined in accordance with Article RT-7 or Nonmandatory Appendix AK. The required input information for each layer is the fiber weight per unit area, the tensile modulus of the resin matrix, the type of roving, and the fiber density.

A step-by-step procedure for lamina with unidirectional roving is as follows:

$$m = \left(1 - \nu_x\nu_y\right)^{-1} \quad (4)$$

$$Q_{xx} = mE_x \quad (5)$$

$$Q_{xy} = m\nu_y E_x \quad (6)$$

$$Q_{yy} = mE_y \quad (7)$$

$$Q_{ss} = E_s \quad (8)$$

where $\nu_y = \nu_x\,E_y/E_x$.

In an isotropic lamina, $E_x = E_y = E$ and $\nu_x = \nu_y = \nu$. Then

$$G_{12} = G = E\,/\,2(1 + \nu) \quad (9)$$

The reduced stiffnesses in an isotropic layer are computed from:

$$Q_{11} = Q_{22} = E\,/\left(1 - \nu^2\right) \quad (10)$$

$$Q_{12} = \nu Q_{11} \quad (11)$$

$$Q_{66} = G \quad (12)$$

The transformed reduced stiffnesses are the reduced stiffnesses expressed in the 1–2 system. The relationship between the *x*–*y* and 1–2 axis systems is shown in Figure RD-1220.3. The 1–2 system is in the plane of the laminate and is chosen for convenience. A typical choice for a cylindrical vessel would be to align 1 with the axial direction and 2 with the circumferential direction. The transformed reduced stiffnesses Q_{ij} are calculated from the reduced stiffnesses Q_{ij} and the angle θ. Let $m = \cos\theta$ and $n = \sin\theta$. Then the equations for the transformed reduced stiffnesses are:

$$Q_{11} = Q_{xx}m^4 + Q_{yy}n^4 + 2Q_{xy}m^2n^2 + 4Q_{ss}m^2n^2 \quad (13)$$

Copyright ASME International (BPVC)

$$Q_{12} = Q_{xx} m^2 n^2 + Q_{yy} m^2 n^2 + Q_{xy} \left(m^4 + n^4 \right) - 4 Q_{ss} m^2 n^2 \quad (14)$$

$$Q_{22} = Q_{xx} n^4 + Q_{yy} m^4 + 2 Q_{xy} m^2 n^2 + 4 Q_{ss} m^2 n^2 \quad (15)$$

$$Q_{16} = Q_{xx} m^3 n - Q_{yy} m n^3 + \left(Q_{xy} + 2 Q_{ss} \right) \left(m n^3 - m^3 n \right) \quad (16)$$

$$Q_{26} = Q_{xx} m n^3 - Q_{yy} m^3 n + \left(Q_{xy} + 2 Q_{ss} \right) \left(m^3 n - m n^3 \right) \quad (17)$$

$$Q_{66} = Q_{xx} m^2 n^2 + Q_{yy} m^2 n^2 - 2 Q_{xy} m^2 n^2 + Q_{ss} \left(m^2 - n^2 \right)^2 \quad (18)$$

The stress–strain relations for the lamina in the 1–2 coordinates are:

$$\sigma_1 = Q_{11} \epsilon_1 + Q_{12} \epsilon_2 + Q_{16} \epsilon_6 \quad (19)$$

$$\sigma_2 = Q_{12} \epsilon_1 + Q_{22} \epsilon_2 + Q_{26} \epsilon_6 \quad (20)$$

$$\sigma_6 = Q_{16} \epsilon_1 + Q_{26} \epsilon_2 + Q_{66} \epsilon_6 \quad (21)$$

In an isotropic laminate, the reduced stiffnesses have the same value for any value of θ, so that the stress–strain relation for the 1–2 system has the same form as eqs. (1), (2), and (3).

RD-1240 STIFFNESS COEFFICIENTS FOR THE LAMINATE

The stiffness coefficients A_{ij}, B_{ij}, and D_{ij} are required for analysis. They are used to relate the resultant forces and moments (Figure RD-1220.1 and Figure RD-1220.2) to the middle surface strains and curvatures.

$$N_1 = A_{11} \epsilon_1^o + A_{12} \epsilon_2^o + A_{16} \epsilon_6^o + B_{11} K_1 + B_{12} K_2 + B_{16} K_6 \quad (22)$$

$$N_2 = A_{12} \epsilon_1^o + A_{22} \epsilon_2^o + A_{26} \epsilon_6^o + B_{12} K_1 + B_{22} K_2 + B_{26} K_6 \quad (23)$$

$$N_6 = A_{16} \epsilon_1^o + A_{26} \epsilon_2^o + A_{66} \epsilon_6^o + B_{16} K_1 + B_{26} K_2 + B_{66} K_6 \quad (24)$$

$$M_1 = B_{11} \epsilon_1^o + B_{12} \epsilon_2^o + B_{16} \epsilon_6^o + D_{11} K_1 + D_{12} K_2 + D_{16} K_6 \quad (25)$$

$$M_2 = B_{12} \epsilon_1^o + B_{22} \epsilon_2^o + B_{26} \epsilon_6^o + D_{12} K_1 + D_{22} K_2 + D_{26} K_6 \quad (26)$$

$$M_6 = B_{16} \epsilon_1^o + B_{26} \epsilon_2^o + B_{66} \epsilon_6^o + D_{16} K_1 + D_{26} K_2 + D_{66} K_6 \quad (27)$$

The extensional stiffness coefficients are calculated from the transformed reduced stiffnesses for each layer $(Q_{ij})_k$, the thicknesses t_k, and the distance Z_k. The location of the reference plane in the z direction does not affect the validity of the equations in the paragraph. However, it shall coincide with the neutral axis, or the plane to which the stress resultants and moments are referred.

$$A_{ij} = \sum_{k=1}^{N} \left(Q_{ij} \right)_k t_k \quad (28)$$

where
i = 1, 2, 6
j = 1, 2, 6
N = number of layers

The coupling stiffnesses are obtained from:

$$B_{ij} = \sum_{k=1}^{N} \left(Q_{ij} \right)_k Z_k t_k \quad (29)$$

where
i = 1, 2, 6
j = 1, 2, 6

The bending stiffnesses are obtained from:

$$D_{ij} = \sum_{k=1}^{N} \left(Q_{ij} \right)_k \left(t_k Z_k^2 + t_k^3 / 12 \right) \quad (30)$$

where
i = 1, 2, 6
j = 1, 2, 6

RD-1250 PROCEDURE FOR CALCULATING THE STIFFNESS COEFFICIENTS[11]

The following is a step-by-step algorithm for calculating the laminate stiffness coefficients (Figure RD-1250.1).

(a) From the known layer thicknesses and laminating sequence, calculate the N t_k and Z_k.

Copyright ASME International (BPVC)

Figure RD-1250.1
Geometry of an *N*-Layered Laminate

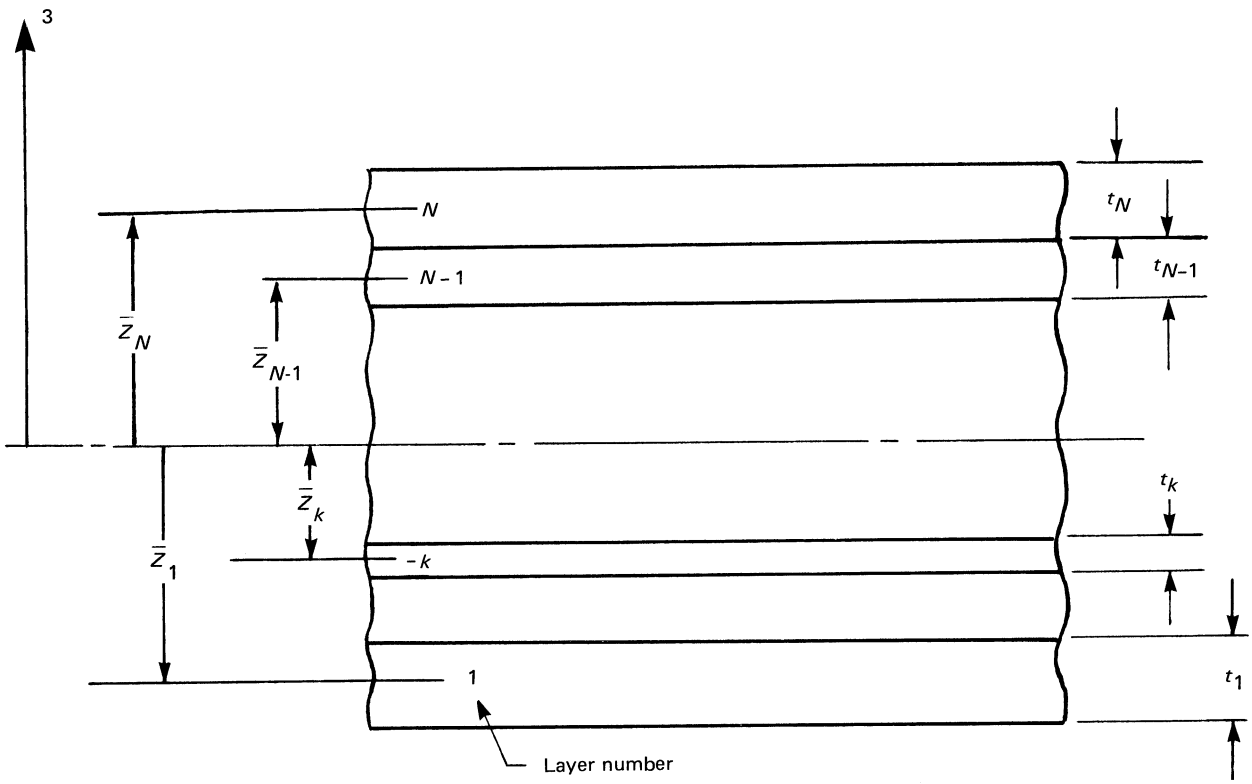

(b) For each layer, given $(E_x)_k$, $(E_y)_k$, $(\nu_x)_k$, and $(E_s)_k$, compute the reduced stiffnesses $(Q_{xx})_k$, $(Q_{xy})_k$, and $(E_s)_k$ from eqs. RD-1230(4) through RD-1230(8). For isotropic plies, use eqs. RD-1230(9) through RD-1230(12).

(c) Transform the reduced stiffness $(Q_{ij})_k$ for each layer from the principal material directions to the vessel directions, using eqs. RD-1230(13) through RD-1230(18), to obtain the transformed reduced stiffness for each layer $(Q_{ij})_k$. In the case of isotropic layers, the transformation is not required, because eqs. RD-1230(1), RD-1230(2), and RD-1230(3) are valid for all angles θ;

(d) Calculate the extensional stiffness coefficients A_{ij} for the entire laminate from the $(Q_{ij})_k$, t_k, and eq. RD-1240(28).

(e) Calculate the coupling stiffness coefficients B_{ij} for the laminate from the $(Q_{ij})_k$, t_k, Z_k, and eq. RD-1240(29).

(f) Calculate the bending stiffness coefficients D_{ij} for the laminate from the $(Q_{ij})_k$, t_k, Z_k, and eq. RD-1240(30).

Copyright ASME International (BPVC)

PART RF
FABRICATION REQUIREMENTS

ARTICLE RF-1
GENERAL REQUIREMENTS

RF-100 SCOPE

This Part provides rules governing the fabrication of fiber-reinforced plastic pressure vessels. The fabrication processes are limited to the bag-molding, centrifugal-casting, contact-molding, and filament-winding processes for Class I vessels, and limited to contact molding and filament winding for Class II vessels.

RF-110 PROCEDURE SPECIFICATIONS

(a) For every combination of fabrication method, Design Specification, and material variation employed in fabricating vessels to be marked with the Certification Mark, the Fabricator shall prepare a Procedure Specification which shall be qualified in accordance with Part RQ of this Section before it is used to fabricate vessels to be so marked.

(b) Any essential variation from the Procedure Specification for Class I vessels (see RQ-200, RQ-300, RQ-400, and RQ-500) shall require that the Procedure Specification be rewritten and requalified before being used to fabricate vessels to be marked with the Certification Mark.

(c) The Procedure Specification for Class II vessels (Form Q-120) requires that the Fabricator establish the design of the vessel in accordance with Article RD-11 based on the elastic and strength constants for the specific combinations of fiber, resin, ply sequence, and ply orientations used for the vessel laminate. Any variation in materials used to fabricate the vessel or vessel part from those materials used to determine the elastic and strength constants upon which the Design Calculations were based shall require that new elastic constants be obtained and new Design Calculations made. Any variation in the ply sequence or ply orientation made in the fabrication of the vessel or vessel part that differs from the ply sequence and orientation specified in the qualified Procedure Specification and upon which the Design Calculations were based shall require that new calculations be made.

The new calculations shall satisfy the User's Design Specification and the requirements of this Section. The Procedure Specification shall be amended to reflect the actual fabrication and the Design Report amended to reflect the design basis.

Copyright ASME International (BPVC)

ARTICLE RF-2
SPECIAL FABRICATION REQUIREMENTS FOR BAG-MOLDING PROCESS (FOR CLASS I VESSELS ONLY)

RF-200 FIBER CONTENT

The composite structure shall consist of random short length[12] fiber filaments in a resin matrix. The weight of the fiber reinforcement shall conform to that set forth in the Procedure Specification (see Form Q-106) within a tolerance of +20% and −0%. Supplementary pads used to give greater wall thickness at openings and attachments shall have a fiber content not less than 35% by weight.

RF-201 FIBER COMPOSITION

One or more of the fiber types stipulated in RM-110 and specified in the Procedure Specification shall be used for reinforcement.

RF-210 FORM OF FIBER REINFORCEMENT

(a) The fiber reinforcement shall consist of mats or preforms made from chopped fiber strands. The percentage of resin binder shall not exceed 10% by weight in mat or preform.

(b) The flat mats for cylindrical reinforcement shall be laid up in a staggered pattern and rolled on a mandrel prior to assembly into the mold (see Figure RF-210.1).

(c) The head or end preforms shall be made by depositing chopped fiber from an airstream with one of the resin systems specified in RM-120 dispersed in the fiber (see Figure RF-210.2).

RF-211 RESIN SYSTEM

The resin system shall be one of the resin systems specified in RM-120 and as required for the particular service conditions specified in the Design Specification and by the qualified Procedure Specification. No filler, pigment, or dye additions shall be used which will interfere with the natural color of the resin except as permitted by the Procedure Specification.

RF-212 CURE

If other than ambient temperature cure is required, the design and operation of the curing equipment shall assure uniform heating over the entire surface of the pressure

Figure RF-210.1
Fiber Side Wall Lay-Up for Bag Molding

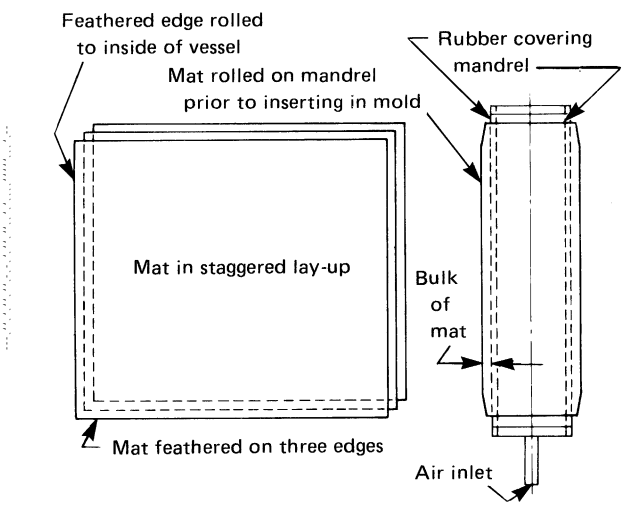

Figure RF-210.2
Head or End Preform for Cylindrical Vessel

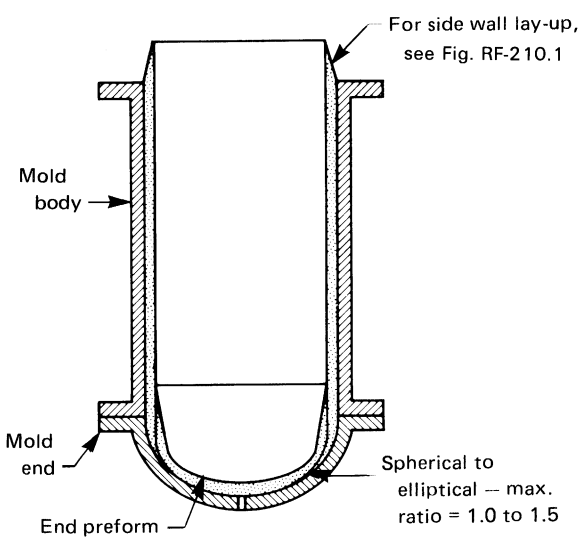

Copyright ASME International (BPVC)

vessel and vessel parts. The curing time and temperature shall conform to those stipulated in the qualified Procedure Specification (see Form Q-106).

RF-220 MOLDS

RF-221 MOLD MATERIAL

The molds for pressure bag molding of pressure vessels and vessel parts may be fabricated of any material or combination of materials. The molds shall have sufficient dimensional stability to withstand the bag pressure loads during the forming and cure cycles.

RF-222 MOLD RELEASE AGENT

The surface of the mold in contact with the vessel or vessel part shall be treated with a suitable release agent to facilitate removal of the vessel or part from the mold. Such release agent shall not be detrimental to the vessel or part.

RF-223 MOLD REMOVAL

The mold may be removed from the vessel, or vice versa, by any technique which will not damage the vessel.

RF-224 PRESSURE BAGS

The pressure bags used to compress the fiber reinforcement mats and preforms and to hold the fiber and resin in position during the curing cycle may be made of any flexible material that the molding resin will not attack, or which can be protected from such attack by a suitable material.

RF-230 LINERS

RF-231 LINER MATERIAL

Liners, when used, may be made of elastomeric or plastic material. When such liner materials are used, the liner may be used as the pressure bag. Alternatively, liners may be applied to the completed vessel.

RF-232 PROVISIONS IN LINERS FOR OPENINGS IN VESSELS

Liners shall be designed so that they extend completely through all access openings in the vessel.

RF-240 OPENINGS IN VESSELS

The number, size, and location of openings in bag-molded vessels shall meet the requirements of the Design Specification. The adequacy of reinforcement, if any, for such openings shall be determined by the test and design criteria required by RD-160 to prove design adequacy.

RF-250 MOLDED-IN FITTINGS

Openings less than NPS $1\frac{1}{2}$ (DN 40) may be fabricated by molding around a removable insert form, provided the molding operation is detailed in the Procedure Specification and subsequent proof of design adequacy is demonstrated in accordance with RD-160.

Copyright ASME International (BPVC)

ARTICLE RF-3
SPECIAL FABRICATION REQUIREMENTS FOR CENTRIFUGAL-CASTING PROCESS (FOR CLASS I VESSELS ONLY)

RF-300 FIBER CONTENT

The composite structure shall consist of random short length[12] fiber filaments in a resin matrix. The weight of the fiber reinforcement shall conform to that set forth in the Procedure Specification (see Form Q-106) within a tolerance of +10% and −0%. Supplementary pads used to give greater wall thickness at openings and attachments shall have a fiber content not less than 35% by weight.

RF-301 FIBER COMPOSITION

One or more of the fiber types complying with the composition stipulated in RM-110 and specified in the qualified Procedure Specification shall be used for reinforcement.

RF-310 FORM OF REINFORCEMENT

The fiber reinforcement for centrifugally cast cylinders shall consist of chopped fiber strands or rovings. Fabrication of heads shall comply with RF-210(c).

RF-311 RESIN SYSTEM

The resin system shall be one of the resin systems specified in RM-120 and as required for the particular service conditions specified in the Design Specification and by the Procedure Specification. No filler, pigment, or dye additions shall be used which will interfere with the natural color of the resin except as permitted by the Procedure Specification.

RF-312 CURE

If other than ambient temperature cure is employed, the design and operation of the curing equipment shall assure uniform heating over the entire cylinder. The curing times and temperatures shall comply with the qualified Procedure Specification (see Form Q-106).

RF-320 MANDRELS

RF-321 MANDREL MATERIAL

The mandrel shall be fabricated of any material or combination of materials of sufficient rigidity and dimensional stability to withstand the centrifugal-casting loads and the curing cycle.

RF-322 MANDREL RELEASE AGENT

The mandrel shall be treated with a suitable release agent to facilitate removal of the cured cylinder. Such release agent shall not be detrimental to the cylinder.

RF-323 MANDREL REMOVAL

The cylinder may be removed from the mandrel, or vice versa, by any technique which will not damage the cylinder.

RF-324 MATCHED-DIE-MOLDED HEADS

Matched-die-molded heads used as closures for centrifugally cast cylinders shall be fabricated in accordance with the requirements of Article RF-6.

RF-330 LINERS

RF-331 LINER MATERIAL

Liners, when used, may be made of elastomeric or plastic material. The liner may be applied to the centrifugally cast cylinder after its heads are attached by adhesive bonding.

RF-332 PROVISIONS IN LINERS FOR VESSEL OPENINGS

Liners shall be designed so that they extend completely through all access openings in the vessel.

RF-340 OPENINGS IN VESSELS

The number, size, and location of openings in centrifugally cast cylinders and attached heads shall meet the requirements of the User's Design Specification and this Section. The adequacy of reinforcement, if any, for such openings shall be determined by the tests required by RD-160 to prove design adequacy.

Copyright ASME International (BPVC)

ARTICLE RF-4
SPECIAL FABRICATION REQUIREMENTS FOR FILAMENT-WINDING PROCESS (CLASSES I AND II)

RF-400 FIBER CONTENT

The composite structure shall consist of fiber strands in a resin matrix. The weight of the fiber reinforcement shall comply with the qualified Procedure Specification (see Form Q-107 for Class I vessels and Form Q-120 for Class II vessels) with a tolerance of +10% and −0%.

RF-400.1 Fiber Content in Supplementary Pads. Supplementary pads used to give greater wall thickness at openings and attachments shall have a fiber content not less than 35% by weight.

RF-401 FIBER COMPOSITION

One or more of the fiber types complying with the composition stipulated in RM-110 and specified in the qualified Procedure Specification shall be used for reinforcement of filament-wound pressure vessels.

RF-410 FORM OF REINFORCEMENT

RF-410.1 Patterns. Specific winding patterns for the continuous fiber strands shall be used as defined in the qualified Procedure Specification (see Form Q-107 for Class I vessels and Form Q-120 for Class II vessels). Any winding pattern which places the filaments in the desired orientation and is designated in the Procedure Specification may be used.

RF-410.2 Alignment With Stresses. The patterns shall be arranged so that the stressed filaments are aligned to resist the principal stresses which result from internal pressure and other loadings.

RF-410.3 Wall Thickness. The wall thickness shall be governed by the number of layers of wound strands of filaments specified in the qualified Procedure Specification for the particular vessel.

RF-411 RESIN SYSTEM

The resin system shall be one of the resin systems specified in RM-120 and as required for the particular service conditions specified by the Design Specification and qualified Procedure Specification. No filler, pigment, or dye additions shall be used which will interfere with the natural color of the resin except as permitted by the Procedure Specification.

RF-412 CURE

If other than ambient temperature cure is employed, the design and operation of the curing equipment shall provide uniform heating over the entire surface of the vessel. Heating may be done from the inside or outside of the pressure vessel or from both inside and outside. The cure times and temperatures shall comply with those stipulated in the qualified Procedure Specification (see Form Q-107 for Class I vessels and Form Q-120 for Class II vessels).

RF-413 FILAMENT WINDING

(a) Tensioning. Tension on the strands of filaments during the winding operation shall be controlled to assure uniformly stressed filaments in the composite wall.

(b) Winding Speed. The speed of winding shall be limited only by the ability to

(1) meet the tensioning requirements

(2) comply with the specified winding pattern

(3) ensure adequate resin impregnation

(c) Bandwidth and Spacing. The bandwidth and spacing shall comply with those specified in the qualified Procedure Specification.

RF-420 MANDRELS

RF-421 MANDREL MATERIAL

The mandrel may be fabricated of any material or combination of materials with sufficient rigidity and dimensional stability to resist the winding loads and the compressive loads on the mandrel which occur during the cure cycle.

RF-422 MANDREL RELEASE AGENT

The mandrel, if removed, may be treated with a suitable release agent to facilitate its removal from the cured pressure vessel. Such release agent shall not be detrimental to the finished vessel.

Copyright ASME International (BPVC)

RF-423 MANDREL REMOVAL

The mandrel shall be removed by any technique which shall not damage the filament-wound composite or the liner, if one is present.

RF-430 LINERS

RF-431 LINER MATERIAL

Liners, when used, may be made of elastomeric, plastic, or metallic materials. The liner may be applied to the mandrel prior to the start of the winding operation.

(a) If applied to the mandrel before the winding operation begins, the thickness and hardness of the liner material shall be such that the filament orientation and tension will not be adversely affected by deflection or "flow" of the liner material.

(b) Alternatively, the liner may be applied to the completed filament-wound pressure vessel, in which case the restrictions on thickness and hardness do not apply.

(c) If the liner is required to be bonded to the filament-wound composite, the outer liner surface shall be treated to facilitate such bonding.

(d) The design of metallic liners shall take into account the pronounced difference in the modulus of elasticity of the laminate and the metallic liner.

(e) For vessels used for potable water, as described in RG-113 (Section IV Application), the liner materials may be those listed in Section IV, HLW-200 or shall be suitable for potable water applications as demonstrated by approval of the material by the National Sanitation Foundation (NSF) in accordance with NSF Standard 14.

RF-432 PROVISIONS IN LINERS FOR VESSEL OPENINGS

Liners shall be designed so that they extend completely through all access openings in the vessel.

RF-440 OPENINGS IN VESSELS

The number, size, and location of openings in filament-wound pressure vessels classified by RG-404.1 shall meet the requirements of the User's Design Specification. If any opening reinforcement is used, the design adequacy shall be determined by RD-160 for Class I vessels. For Class II vessels the reinforcement shall comply with the design criteria of Article RD-11 and acceptance testing criteria of Article RT-6.

Copyright ASME International (BPVC)

ARTICLE RF-5
SPECIAL FABRICATION REQUIREMENTS FOR CONTACT-MOLDING PROCESS (CLASSES I AND II)

RF-500 FIBER CONTENT

The composite structure shall consist of random short length[12] fiber filaments and roving (or biaxial fabric, singular or in combination) in a resin matrix. The weight of the fiber reinforcement shall comply with the qualified Procedure Specification (see Form Q-108 for Class I vessels and Form Q-120 for Class II vessels) within a tolerance of +10% and −0%. Supplementary pads used to give greater wall thickness at openings and attachments shall have a fiber content not less than 35% by weight.

RF-501 FIBER COMPOSITION

One of the fiber types complying with the composition stipulated in RM-110 and as specified in the qualified Procedure Specification shall be used for reinforcement.

RF-510 FORM OF FIBER REINFORCEMENT

(a) The fiber reinforcement shall consist of random short length fiber filaments and roving (or biaxial fabrics) as specified in RF-501.

(b) Flat mats for cylindrical reinforcement shall be laid up as separate layers and overlapped in a staggered pattern. Resin shall be applied to each layer in such a manner as to wet out completely.

(c) On cylindrical components, the orientation of the warp and weft fiber stands of woven roving (or biaxial fabrics) shall be defined with respect to the circumferential (hoop) and longitudinal (axial) axis of the cylindrical component.

(d) On elliptical or hemispherical shapes, the orientation of the warp and weft fiber stands of woven roving (or biaxial fabrics) shall be defined with respect to the meridional and circumferential axis.

RF-511 RESIN SYSTEM

The resin system shall be one or more of the resins specified in RM-120 and as required for the particular service conditions specified in the Design Specification and by the qualified Procedure Specification. No filler, pigment, or dye additions shall be used which will interfere with the natural color of the resin except as permitted by the Procedure Specification.

RF-512 CURE

The cure procedure and post cure if required shall comply with those stipulated in the qualified Procedure Specification (see Form Q-108 for Class I vessels and Form Q-120 for Class II vessels).

RF-520 MOLDS

RF-521 MOLD MATERIAL

The molds for contact molding of pressure vessels may be fabricated of any material or combination of materials. The molds shall have sufficient dimensional stability to withstand the contact-molding operation and cure or post cure procedures.

RF-522 MOLD RELEASE AGENT

The surface of the mold in contact with the vessel shall be treated with a suitable release agent to facilitate removal from the mold. Such release agent shall not be detrimental to the finished vessel.

RF-523 MOLD REMOVAL

The mold may be removed from the vessel, or vice versa, by any technique which will not damage the vessel.

RF-530 LINERS

RF-531 LINER MATERIAL (19)

(a) Liners for Class I vessels, when used, may be made of metallic, elastomeric, thermoset, or thermoplastic materials.

(b) Liners for Class II vessels, when used, may be made of either thermoset or thermoplastic materials.

RF-532 PROVISIONS IN LINERS FOR OPENINGS IN VESSELS

Liners shall be designed so that they extend completely through all access openings in the vessel.

Copyright ASME International (BPVC)

RF-540 OPENINGS IN VESSELS

The number, size, and location of openings in contact-molded vessels shall meet the requirements of the User's Design Specification. If any opening reinforcement is used, the design adequacy shall be determined by RD-160 for Class I vessels. For Class II vessels the reinforcement shall comply with the design criteria of Article RD-11 and the acceptance criteria of Article RT-6.

Copyright ASME International (BPVC)

ARTICLE RF-6
SPECIAL FABRICATION REQUIREMENTS FOR MATCHED MOLDED HEADS (USED FOR CLOSURES FOR CENTRIFUGALLY CAST VESSELS — FOR CLASS I VESSELS ONLY)

RF-600 CONTENT

The composite structure shall consist of random short length[12] fiber filaments in a resin matrix. The weight of the fiber reinforcement shall comply with the qualified Procedure Specification (see Form Q-106) within a tolerance of +20% and −0%. Supplementary pads used to give greater wall thickness at openings and attachments shall have a fiber content not less than 35% by weight.

Figure RF-610.1
Fiber Preform and Insert for Head for Centrifugally Cast Vessel

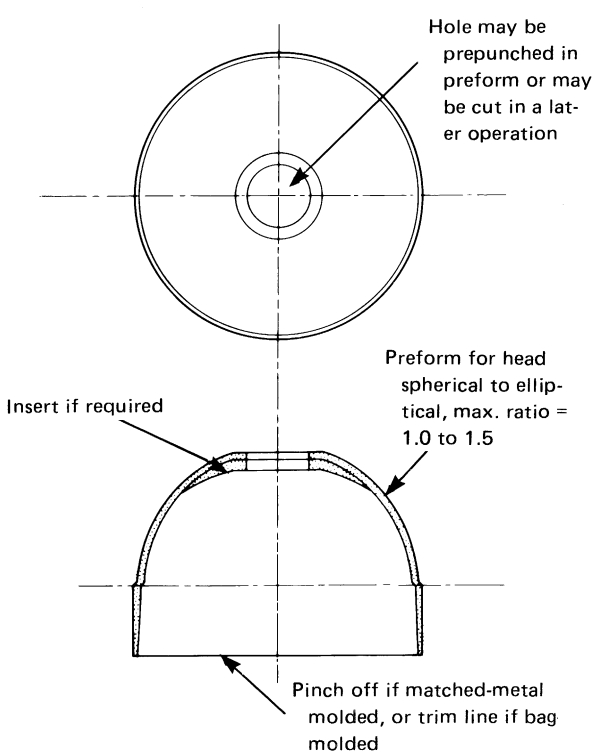

RF-601 FIBER COMPOSITION

One or more of the fiber types complying with the composition stipulated in RM-110 and as specified in the qualified Procedure Specification shall be used for reinforcement.

RF-610 FORM OF FIBER REINFORCEMENT

(a) The fiber reinforcement shall consist of preforms or preforms and inserts made from chopped fiber strands. The percentage of resin shall not exceed 10% by weight in the preforms or inserts.

(b) Inserts, if used, shall be tapered to a feather edge to blend smoothly into the preform (see Figure RF-610.1).

(c) The head or end preforms shall be made by depositing chopped fibers from an airstream with a suitable resin binder dispersed in the fiber.

(d) The insert may consist of one or more preforms to obtain the required thickness. These inserts may or may not be on the axis of the vessel, depending on port or opening requirements (see Figure RF-610.2).

(e) Rings of continuous rovings molded into heads to reinforce holes are permissible.

RF-611 RESIN SYSTEM

The resin system shall be one of the resin systems specified in RM-120 and as required for the particular service conditions specified in the Design Specification and by the qualified Procedure Specification. No filler, pigment, or dye additions shall be used which will interfere with the natural color of the resin except as permitted by the Procedure Specification.

RF-612 CURE

If other than ambient temperature cure is employed, the design and operation of the curing equipment shall assure uniform heating over the entire surface of the head. The curing times and temperatures shall conform to those stipulated in the qualified Procedure Specification (see Form Q-106).

Copyright ASME International (BPVC)

Figure RF-610.2
Fiber Head or End Preformed Inserts for Centrifugally Cast Vessel Heads

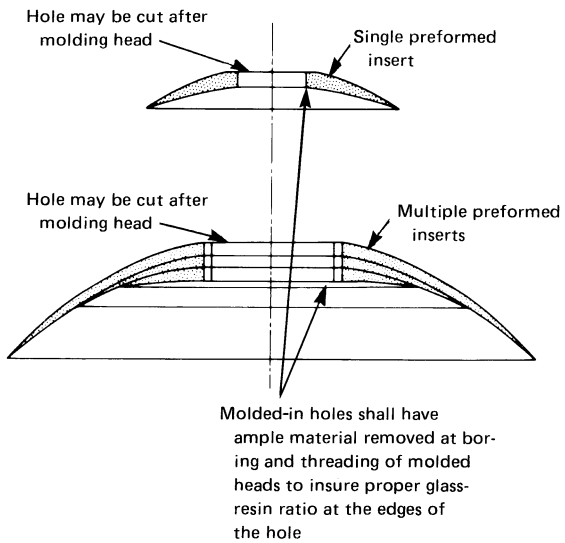

RF-620 MOLDS

Heads used as closures for centrifugally cast vessels may be molded by either:

(a) matched molds in which both male and female are rigid and uniformly heated; or

(b) matched molds in which the female mold is uniformly heated and the male mold is a pressure bag.

RF-621 MOLD MATERIAL

The molds may be fabricated of any material or combination of materials. The molds shall have sufficient dimensional stability to withstand the pressure loads during the forming and cure cycles.

RF-622 MOLD RELEASE AGENT

The surfaces of the mold in contact with the head shall be treated with a suitable release agent to facilitate removal of the head from the mold. Such release agent shall not be detrimental to the heads.

RF-623 HEAD REMOVAL

The head may be removed from the mold by any technique which will not damage the head.

RF-624 PRESSURE BAGS

A pressure bag used in lieu of the male mold to compress the fiber preform assembly and hold the fiber and resin in position during the curing cycle may be made of any flexible material that the molding resin will not attack or which can be protected from such attack by a suitable material.

RF-630 OPENINGS IN HEADS

The number, size, and location of openings in heads shall meet the requirements of the User's Design Specification. The adequacy of reinforcement, if any, for such openings shall be determined by the tests required by RD-160 to prove design adequacy.

Copyright ASME International (BPVC)

ARTICLE RF-7
SPECIAL FABRICATION REQUIREMENTS FOR JOINING COMPONENTS

RF-700 PROCEDURE SPECIFICATIONS AND QUALIFICATIONS

(a) When the fabricating process includes joining of parts such as heads, or when it is desired to join two or more cylinders to produce a long shell, the Procedure Specification shall include full details of the joining process. Any variation in the design of the joints being bonded, outside of those inherent in the process of forming the surfaces to be bonded, and any variation in the method used as set forth in the qualified Procedure Specification, shall require requalification of the design and the Procedure Specification.

(b) Longitudinal seams made by any joining method are prohibited.

(c) Adhesive bonding of the type whereby mating surfaces of two parts are joined by a thin adhesive or glue joint shall be limited to Class I vessels (see Form Q-115).

(d) Joining of Class II vessel parts shall be limited to secondary overlay bonding as described in Article RD-11.

Copyright ASME International (BPVC)

PART RQ
QUALIFICATION REQUIREMENTS

ARTICLE RQ-1
SCOPE

RQ-100 RESPONSIBILITY FOR QUALIFICATION

Each Fabricator shall be responsible for qualifying the designs and the Procedure Specifications used in fabricating fiber-reinforced plastic pressure vessels and parts of vessels.

RQ-101 FABRICATION PROCESSES

The fabrication processes which may be used under this Section shall be restricted to bag molding,[5] centrifugal casting, contact molding, and filament winding for Class I vessels, and contact molding and filament winding for Class II vessels.

RQ-102 PRODUCTION WORK WITHOUT QUALIFICATIONS

No fabrication shall be undertaken on vessels to be stamped with the Certification Mark until a written Procedure Specification has been prepared and qualified by the Fabricator. For Class I vessels the Procedure Specification shall be qualified by the test of one or more prototype vessels in accordance with RD-160.

For Class II vessels the Procedure Specification shall be qualified in accordance with RF-110(c) and by subjecting each vessel design to the mandatory stress analysis required by Article RD-11. Both Design Calculations and the fabrication of the specific vessel shall be for the specific materials, ply sequence, and ply orientation detailed in the Procedure Specification (Form Q-120).

Furthermore, no Code fabrication shall be undertaken until the Fabricator has obtained a Certificate of Authorization from ASME.

RQ-110 MAINTENANCE OF PROCEDURE SPECIFICATION AND QUALIFICATION RECORDS

The Fabricator shall maintain records of the procedures used in fabricating vessels and vessel parts and in bonding vessel parts together. For Class I vessels, the Fabricator shall also maintain records of the tests and their results by which the Procedure Specifications were qualified for use in fabrication. For Class II vessels, the Fabricator shall maintain the records of Design Calculations, coupon tests from which elastic and strength constants were obtained, the Procedure Specifications that detail the materials used and the laminate ply sequence and ply orientation, fabrication procedures and quality control records, and the test results per Article RT-6. Such records shall be dated and shall be certified by the Fabricator and verified by the Inspector (see RI-110). The Fabricator shall keep these records on file for at least 5 yr and in the case of mass-produced Class I vessels, the Fabricator shall keep these records on file for at least 5 yr after the production of such vessels has ceased.

RQ-120 PROCEDURE SPECIFICATION QUALIFICATION FORMS

Recommended forms showing the information required for qualifying the design and the Procedure Specification are as follows:

(a) Form Q-106 for fabrication by bag molding and centrifugal casting — Class I vessels;

(b) Form Q-107 for fabrication by filament winding — Class I vessels;

(c) Form Q-108 for fabrication by contact molding — Class I vessels;

(d) Form Q-115 for fabrication by adhesive bonding — Class I vessels;

(e) Form Q-120 for fabrication and assembly procedure — Class II vessels.

Copyright ASME International (BPVC)

RQ-130 MEANS TO BE USED IN QUALIFYING CLASS I DESIGNS AND FABRICATING PROCEDURES

In qualifying Class I vessel designs and fabrication procedures, the qualification checks listed in RQ-131 and the Qualification Tests listed in RQ-132 shall be used.

RQ-131 QUALIFICATION CHECKS[13]

The following checks (see Articles RQ-2, RQ-3, and RQ-4 for special requirements) shall be applied to the prototype vessels.

(a) The vessel shall be visually checked for imperfections in the laminate.

(1) The structural laminates shall conform to the visual acceptance criteria given in Table 6-100.1.

(2) The criterion for inspection of the liner, if used, shall be established by mutual agreement between the Fabricator and the User.

(b) The thickness of the vessels at a minimum of 12 points shall be checked by mechanical gages and/or ultrasonic equipment (see RT-340).

(c) The percent of fiber and resin by weight, constituting the laminate, shall be determined (see RT-212).

(d) The weight (mass) of the whole vessel shall be determined and shall not be less than 95% of that stated in the Procedure Specification.

RQ-132 QUALIFICATION TESTS[13]

The following tests shall be applied to the prototype vessel or vessels or parts thereof:

(a) Barcol hardness test (see RT-221), to verify that the laminate has been cured in accordance with the Procedure Specification;

(b) volumetric expansion test, to verify that the laminate used has a modulus of elasticity within the range specified by the designer;

NOTE: In lieu of measuring the volumetric change of the vessel by determining the difference in volumes of fluid it will contain at the design pressure and at atmospheric pressure, it is permissible to check the circumference of the vessel at a minimum of three points evenly spaced along its length. The distance between such reference points shall not exceed 5 ft (1.5 m). The measurement shall be made at both atmospheric pressure and design pressure and shall show no permanent distortion.

(c) cyclic pressure plus hydrostatic qualification pressure test (see RT-223);

(d) hydrostatic qualification pressure test, by which the design pressure is determined [one-sixth of qualification pressure for all vessel types, except one-fifth for filament-wound vessels with uncut filaments (RG-404.2)];

(e) suitable tests, utilizing loads simulating the expected loadings of vessels subject to bending and shearing caused by any expected combination of loadings listed in RD-120.

RQ-140 MEANS FOR QUALIFYING CLASS II VESSEL DESIGN AND FABRICATION

In qualifying Class II vessel designs and fabrication procedures utilized, the qualification checks listed in RQ-141 and the Acceptance Test listed in RQ-142 shall be used.

RQ-141 QUALIFICATION CHECKS

The following checks shall be applied to each vessel designed in accordance with the mandatory design rules of Article RD-11.

(a) Visual Checks. The vessel shall be visually checked for imperfections in the laminate.

(1) The structural laminates shall comply with the visual acceptance criteria given in Table 6-100.2.

(2) The criterion for inspection of the liner, if used, shall be established by mutual agreement between the Fabricator and the User.

(b) Thickness and Dimensional Checks. All stressed and load bearing members shall be thickness checked in at least 12 places to assure conformance with Design Calculations and Drawings. Thickness measurement shall be consistent with the fiber–resin ratio and number and thickness of individual lamina specified in the qualified Procedure Specification.

Diameters, length, nozzle size and orientation, and other physical dimensions shall be checked for compliance with the drawings as listed in the Design Report.

(c) Barcol Hardness Test. Barcol hardness tests shall be taken on each separately fabricated laminate part to assure proper cure. Tests shall be in accordance with ASTM D2583. Results shall be within the tolerance specified by the resin manufacturer as listed in the qualified Procedure Specification. Both the results and the tolerance shall be recorded in the qualified Procedure Specification.

(d) Thermoplastic Liner Integrity. If a thermoplastic liner is used:

(1) the liner material shall be as specified in the qualified Procedure Specification;

(2) the liner shall be securely bonded to the vessel structural part;

(3) the liner shall not show evidence of excessive heating;

(4) all seams and joints shall have a conductive material between the liner material and the fiber–resin structural component to allow spark testing of the completed vessel;

(5) all liner seams and joints shall be tested with a 20,000 V tester for imperfections. Any location that allows electrical arcing between the voltage tester and the conductive material under the liner shall be repaired.

Copyright ASME International (BPVC)

RQ-142 ACCEPTANCE TEST

The vessel shall be hydrostatically tested in such a manner as to impose stress equal to at least 1.1 times the design stress. Acoustic emissions from the vessel shall be determined in accordance with Article RT-6 of this Section.

--`,```,,,,,````,`,``,,`,`,`-`-`,,`,,`,`,,`---

Copyright ASME International (BPVC)

ARTICLE RQ-2
SPECIAL REQUIREMENTS FOR BAG-MOLDING PROCEDURE QUALIFICATION (CLASS I VESSELS)

RQ-200 ESSENTIAL VARIABLES[14]

Essential variables listed in Form Q-106, deviation from which shall require requalification of the bag-molding procedure, are:

(a) fiber (manufacturer and designation);

(b) fiber surface treatment (manufacturer and designation);

(c) resin (type, manufacturer, and designation);

(d) curing agent (manufacturer and designation);

(e) curing schedule (i.e., time, temperature, or pressure), outside range specified in the qualified Procedure Specification;

(f) post cure (time and temperature);

(g) percent of fiber (outside range specified in the qualified Procedure Specification);

(h) initial bag pressure;

(i) final bag pressure;

(j) weight of vessel (outside range specified in the qualified Procedure Specification);

(k) Barcol hardness (outside range specified in the qualified Procedure Specification);

(l) volumetric expansion (outside range specified in the qualified Procedure Specification).

Requalification of a procedure shall not be required when an essential variable manufacturer's name change is a result of a business merger, a corporate name change, or a commercial event having no effect on the manufacturing process or material chemistry. No other changes in the material shall be permitted, including manufacturing location. Material certificates shall be identical, with the exception of the manufacturer's name, and material traceability shall remain intact. It shall be the Fabricator's responsibility to certify that these requirements have been satisfied and notify the Authorized Inspector of the name change. The Procedure Specification and Form Q-106 shall be revised to document the manufacturer's name change.

RQ-201 NONESSENTIAL VARIABLES

Changes in variables other than those listed in RQ-200 are considered nonessential. They may be made without requalification of the bag-molding procedure, provided the Procedure Specification is modified to show the changes.

Copyright ASME International (BPVC)

ARTICLE RQ-3
SPECIAL REQUIREMENTS FOR CENTRIFUGAL-CASTING PROCEDURE QUALIFICATION (CLASS I VESSELS)

RQ-300 ESSENTIAL VARIABLES[14]

Essential variables listed in Form Q-106, deviation from which shall require requalification of the centrifugal-casting procedure, are:

(a) fiber (manufacturer and designation);

(b) fiber surface treatment (manufacturer and designation);

(c) resin (type, manufacturer, and designation);

(d) curing agent (manufacturer and designation);

(e) curing schedule (i.e., time, temperature, or pressure), outside range specified in the qualified Procedure Specification;

(f) post cure (time and temperature);

(g) percent of fiber (outside range specified in the qualified Procedure Specification);

(h) initial bag pressure;

(i) final bag pressure;

(j) weight of vessel (outside range specified in the qualified Procedure Specification);

(k) Barcol hardness (outside range specified in the qualified Procedure Specification);

(l) volumetric expansion (outside range specified in the qualified Procedure Specification);

(m) mandrel speed.

Requalification of a procedure shall not be required when an essential variable manufacturer's name change is a result of a business merger, a corporate name change, or a commercial event having no effect on the manufacturing process or material chemistry. No other changes in the material shall be permitted, including manufacturing location. Material certificates shall be identical, with the exception of the manufacturer's name, and material traceability shall remain intact. It shall be the Fabricator's responsibility to certify that these requirements have been satisfied and notify the Authorized Inspector of the name change. The Procedure Specification and Form Q-106 shall be revised to document the manufacturer's name change.

RQ-301 NONESSENTIAL VARIABLES

Changes in variables other than those listed in RQ-300 are considered nonessential. They may be made without requalification of the centrifugal-casting procedure, provided the Procedure Specification is modified to show the changes.

Copyright ASME International (BPVC)

ARTICLE RQ-4
SPECIAL REQUIREMENTS FOR FILAMENT-WINDING PROCEDURE QUALIFICATION (CLASS I VESSELS)

RQ-400 ESSENTIAL VARIABLES[14]

Essential variables listed in Form Q-107, deviation from which shall require requalification of the filament-winding procedure, are:

(a) fiber (manufacturer and designation);

(b) fiber surface treatment (manufacturer and designation);

(c) resin (type, manufacturer, and designation);

(d) curing agent (manufacturer and designation);

(e) manner of impregnation;

(f) percent of fiber in composite (outside range specified in the qualified Procedure Specification);

(g) variables of winding process;

(h) curing schedule (i.e., time or temperature), outside range specified in the qualified Procedure Specification;

(i) liner (manufacturer, designation, thickness);

(j) pole pieces (material);

(k) weight (mass) of vessel (outside range specified in the qualified Procedure Specification);

(l) Barcol hardness (outside range specified in the qualified Procedure Specification);

(m) volumetric expansion (outside range specified in the qualified Procedure Specification).

Requalification of a procedure shall not be required when an essential variable manufacturer's name change is a result of a business merger, a corporate name change, or a commercial event having no effect on the manufacturing process or material chemistry. No other changes in the material shall be permitted, including manufacturing location. Material certificates shall be identical, with the exception of the manufacturer's name, and material traceability shall remain intact. It shall be the Fabricator's responsibility to certify that these requirements have been satisfied and notify the Authorized Inspector of the name change. The Procedure Specification and Form Q-107 shall be revised to document the manufacturer's name change.

RQ-401 NONESSENTIAL VARIABLES

Changes in variables other than those listed in RQ-400 are considered nonessential. They may be made without requalification of the filament-winding procedure, provided the Procedure Specification is modified to show the changes.

Copyright ASME International (BPVC)

ARTICLE RQ-5
SPECIAL REQUIREMENTS FOR CONTACT-MOLDING PROCEDURE QUALIFICATION (CLASS I VESSELS)

RQ-500 ESSENTIAL VARIABLES[14]

Essential variables listed in Form Q-108, deviation from which shall require requalification of the contact-molding procedure, are:

(a) fiber (type, form, manufacturer, and designation);

(b) resin (type, manufacturer, and designation);

(c) curing agent (manufacturer and designation);

(d) curing schedule (i.e., time, temperature, or pressure), outside range specified in the qualified Procedure Specification;

(e) post cure (time and temperature);

(f) percent of fiber (outside range specified in the qualified Procedure Specification);

(g) weight of vessel (outside range specified in the qualified Procedure Specification);

(h) Barcol hardness (outside range specified in the qualified Procedure Specification);

(i) volumetric expansion (outside range specified in the qualified Procedure Specification);

(j) total number of plies;

(k) ply sequence and orientation;

(l) surface preparation method and distance for secondary overlays;

(m) length of secondary overlay.

Requalification of a procedure shall not be required when an essential variable manufacturer's name change is a result of a business merger, a corporate name change, or a commercial event having no effect on the manufacturing process or material chemistry. No other changes in the material shall be permitted, including manufacturing location. Material certificates shall be identical, with the exception of the manufacturer's name, and material traceability shall remain intact. It shall be the Fabricator's responsibility to certify that these requirements have been satisfied and notify the Authorized Inspector of the name change. The Procedure Specification and Form Q-108 shall be revised to document the manufacturer's name change.

RQ-501 NONESSENTIAL VARIABLES

Changes in variables other than those listed in RQ-500 are considered nonessential. They may be made without requalification of the contact-molding procedure, provided the Procedure Specification is modified to show the changes.

Copyright ASME International (BPVC)

ARTICLE RQ-6
SPECIAL REQUIREMENTS FOR CLASS II VESSELS

RQ-600 ESSENTIAL DESIGN VARIABLES[15]

Essential design variables listed in Form Q-120 shall be established during the design of the vessel. Any deviation during fabrication in either materials, laminate fabrication, or method shall require that new Design Calculations be made. The new calculations shall satisfy the User's Design Specification and the requirements of this Section (see RF-110). Deviation during fabrication from any of the following shall require requalification of the design.

(a) Part I — Fabrication

(1) fiber (manufacturer, designation, type, and form)

(2) resin (manufacturer, designation, and type)

(3) liner (material, manufacturer, designation, and thickness)

(4) laminate fabrication (each separately fabricated vessel part)

(-a) number of plies

(-b) ply orientation

(-c) ply sequence

(5) cure method

(6) Barcol hardness

(7) percent of fiber

(8) filament winding (bandwidth and spacing)

(9) use of fillers or pigments (material, use, and location)

(b) Part II — Assembly

(1) fiber reinforcement (manufacturer, designation, type, and form)

(2) resin system (manufacturer, designation, and type)

(3) surface preparation details for secondary overlay (method and length)

(4) secondary overlay laminate construction

(-a) number of plies

(-b) ply orientation

(-c) ply sequence

(5) percent of fiber

(6) Barcol hardness

Requalification of a procedure shall not be required when an essential variable manufacturer's name change is a result of a business merger, a corporate name change, or a commercial event having no effect on the manufacturing process or material chemistry. No other changes in the material shall be permitted, including manufacturing location. Material certificates shall be identical, with the exception of the manufacturer's name, and material traceability shall remain intact. It shall be the Fabricator's responsibility to certify that these requirements have been satisfied and notify the Authorized Inspector of the name change. The Procedure Specification and Form Q-120 shall be revised to document the manufacturer's name change.

RQ-601 NONESSENTIAL VARIABLES

Changes in variables other than those listed in RQ-600 are considered nonessential. They may be made without requalification of the design, provided the Procedure Specification is modified to show the changes.

Copyright ASME International (BPVC)

PART RR
PRESSURE RELIEF DEVICES

ARTICLE RR-1
GENERAL REQUIREMENTS

RR-100 PROTECTION AGAINST OVERPRESSURE

(a) All pressure vessels within the scope of this Section shall be provided with protection against overpressure in accordance with the requirements of this Article.

(b) Heat exchangers and similar vessels shall be protected against overpressure in case of an internal failure.

RR-110 TYPES OF OVERPRESSURE PROTECTION

Protection against overpressure shall be provided by one or a combination of the following devices:

(a) direct spring-loaded safety or safety relief valves.

(b) indirectly operated safety or safety relief valves, such as pilot-operated valves. Design of pilot-operated valves or other indirectly operated valves shall be such that the main unloading valve will open automatically at the set pressure and will discharge its full rated capacity if some essential part of the pilot or auxiliary device should fail.

(c) rupture disks.

(d) breaking pin devices.

(e) open flow paths or vents.

(f) overpressure protection by system design.

RR-111 PROTECTION AGAINST EXTERNAL PRESSURE

Vessels used for potable water, as described in RG-113 (Section IV application), shall be equipped with a breather valve directly connected to the inside of the vessel.

RR-112 DESIGN, CONSTRUCTION, CERTIFICATION MARKING, AND INSTALLATION

The design construction, testing, certification, marking, and installation of pressure relief devices required by this Article shall meet the applicable requirements of Section IV, Article 4 or Section VIII, Division 1, UG-125 through UG-140, unless otherwise specified in this Article.

RR-120 SET PRESSURE

When a single pressure relieving device is used, it shall be set to operate[16] at a pressure not exceeding the design pressure of the vessel. When the required capacity is provided in more than one pressure relieving device, only one device need be set at or below the design pressure, and the additional devices may be set to open at higher pressures but in no case at a pressure higher than 105% of the design pressure.

RR-121 PRESSURE EFFECTS TO BE INCLUDED IN SETTING

The pressure at which any device is set to open shall include the effects of static head and back pressure.

RR-130 PERMISSIBLE OVERPRESSURES

The combined capacity of the pressure relief devices shall be sufficient to prevent overpressure in excess of those specified below when the pressure relief devices are discharging at full capacity:

(a) when the overpressure protection is provided by a single pressure relief device, 110% of the design pressure or 3 psi (20 kPa) above design pressure, whichever is greater;

(b) when the overpressure protection is provided by multiple pressure relief devices, 116% of the design pressure or 4 psi (28 kPa) above design pressure, whichever is greater;

(c) for Class II vessels the overpressure protection provision shall be established in the Design Specification.

Copyright ASME International (BPVC)

ARTICLE RR-2
PROVISIONS IN VESSELS FOR INSTALLATION OF PRESSURE RELIEF DEVICES

RR-200 NUMBER, SIZE, AND LOCATION OF CONNECTIONS

RR-201 NUMBER OF CONNECTIONS

Vessels shall have at least one connection for mounting pressure relief devices directly on the vessel, or for connecting piping to pressure relief devices.

RR-202 SIZE OF OPENINGS AND NOZZLES

(a) Openings and nozzles constituting the connections specified in RR-201 shall be designed to provide direct and unobstructed flow between the vessel and its pressure relief devices.

(b) The area through the opening or nozzles and all pipe fittings between a pressure vessel and its pressure relief device shall be at least equal to the area of the pressure relief device(s) inlet and in all cases shall have sufficient area so as not to restrict the flow to the pressure device.

(c) When two or more required pressure relief devices are placed on one connection, the inlet internal cross-sectional area of this connection shall be at least equal to the combined inlet areas of the safety devices connected to it and in all cases shall be sufficient to not restrict the combined flow of the attached devices.

(d) Connections for liquid relief valves shall be at least NPS $\frac{1}{2}$ (DN 15).

RR-203 LOCATION OF OPENINGS AND CONNECTIONS

(a) Openings and connections for pressure relief purposes shall be located so that the nature of the vessel's contents will not hinder flow through such openings and connections.

(b) Connections for vapor pressure relief devices shall be located in the vapor space.

(c) Connections for liquid relief valves shall be below the normal liquid level.

RR-210 STOP VALVES BETWEEN THE VESSEL AND PRESSURE RELIEF DEVICE

There shall be no intervening stop valves between the vessel and its pressure relief device or devices, or between the pressure relief device or devices and the point of discharge, except:

(a) when the stop valves are so constructed or positively controlled that the closing of the maximum number of stop valves possible at one time will not reduce the pressure relief capacity provided by the unaffected relieving devices below the required relieving capacity; or

(b) under the conditions set forth in Nonmandatory Appendix AB.

RR-220 DISCHARGE LINES FROM PRESSURE RELIEF DEVICES

Discharge lines from pressure relief devices shall be designed to facilitate drainage or shall be fitted with an open drain to prevent liquid lodging in the discharge side of the safety device, and such lines shall lead to a safe place of discharge. The size of the discharge lines shall be such that any pressure that may exist or develop shall not reduce the relieving capacity of the relieving devices below that are required to protect the vessel (see Mandatory Appendix 2).

Copyright ASME International (BPVC)

PART RT
RULES GOVERNING TESTING

ARTICLE RT-1
TESTING REQUIREMENTS

RT-100 SCOPE

This Part specifies the requirements for tests to be made during and after fabrication. For Class I vessels, such tests shall consist of a Qualification Test (Article RT-2), Quality Control Test (Article RT-3), and Production Test (Article RT-4). For Class II vessels, such tests shall consist of an Acceptance Test as specified in Article RT-6 and the Material Property Test specified in Article RT-7 to determine the elastic and strength constants that serve as a basis for design.

Hydrostatic tests for both Class I and Class II vessels shall be as specified in Article RT-5.

RT-110 FABRICATOR'S RESPONSIBILITY

The Fabricator completing a vessel or vessel part has the responsibility for conducting the tests stipulated in this Part. The purpose of these tests is to assure that such vessel or part is designed for the service condition specified in the Design Specification and that the procedure for fabricating it is adequate.

RT-111 CERTIFICATION OF COMPETENCY FOR NONDESTRUCTIVE EXAMINATION PERSONNEL

(a) The Fabricator shall certify that each examiner performing acoustic emission testing under this Article has attended a dedicated training course on the subject, passed a written examination, and has the recommended experience level. The training course shall be appropriate for specific NDT Level II qualification according to Recommended Practice No. SNT-TC-1A[17] of the American Society for Nondestructive Testing and should include, as a minimum, the following general topics:

(1) basic technology and terminology of acoustic emission;

(2) fiber-reinforced plastic pressure vessel construction;

(3) failure mechanisms of reinforced plastics;

(4) acoustic emission instrumentation;

(5) instrument checkout;

(6) vessel filling requirements;

(7) the provisions of Section V, Article 11;

(8) characteristics of spurious emission;

(9) data collection and interpretation;

(10) test reports.

The experience level shall be that recommended by SNT-TC-1A for Level II certification in acoustic emission testing.

(b) Personnel who have attended the training prescribed above, and passed a Level I examination but not a Level II examination, may perform the test but only to the instructions of, and with adequate supervision from, a person who meets the requirements of (a) above.

RT-112 TEST REPORTS

For Class I vessels, the Fabricator has the responsibility of preparing and keeping on file for at least 5 yr (see RG-321) a detailed report of the tests that were conducted to prove the design of each vessel in order to be marked with the Certification Mark, together with the qualified Procedure Specification under which the prototype vessel was fabricated. For Class II vessels, the Acceptance Test Report shall be kept for 10 yr. This Acceptance Test Report shall be certified by the Fabricator and verified by the Inspector.

RT-120 INSPECTOR'S DUTIES

See RI-130.

Copyright ASME International (BPVC)

ARTICLE RT-2
DESIGN AND PROCEDURE QUALIFICATION TEST REQUIREMENTS FOR CLASS I VESSELS

RT-200 GENERAL

The tests and examinations stipulated in this Article are intended to qualify both the design of a prototype vessel and the Procedure Specification in accordance with which it has been fabricated. Production vessels, which conform in design to the prototype vessel and which are fabricated in accordance with the same qualified Procedure Specification, may be marked with the Certification Mark after the Inspector has ensured that the provisions of this Code have been complied with (see RG-321 and RI-130). The report of these tests shall be designated as the Qualification Test Report and shall become part of the Fabricator's Design Report.

RT-201 ALTERNATIVE REQUIREMENTS

When a number of Class I vessels are identical in every detail of design, materials, and fabrication except for a difference in shell length, the entire group or series may be qualified for RT-212 Weight of Resin and Fiber and RT-223 Cyclic Pressure and Hydrostatic Pressure Qualification Tests by subjecting only the longest and shortest length vessels in the series to these tests.

To qualify for this alternative method, every vessel in the series shall be identical in all essential variables (see Part RQ) with the exception of vessel weight and volumetric expansion which may vary with shell length.

A vessel series that contains nozzles, or openings, or both may also qualify for this alternative method. To qualify as identical in axial position, nozzles or openings located along the longitudinal axis of the shell shall remain a fixed distance from the nearest vessel end for all vessels in the series.

To qualify a vessel series for RT-223 Cyclic Pressure and Hydrostatic Pressure Qualification Tests, the vessels tested shall be supported so as to create the worst case of loadings expected for the entire vessel series (see RD-120). If the worst case nozzle/opening placement is not tested with the longest and shortest length vessels, additional vessels shall be tested.

Each vessel in the series shall have its own Fabricator's Design Report (RG-321.1) and shall be qualified individually with the exception of RT-212 and RT-223. Qualification to RT-212 and RT-223 for all vessels in the series will be by reference to the lengths tested.

RT-202 OMITTED OR REDUCED-IN-SIZE NOZZLES OR OPENINGS FOR FILAMENT-WOUND VESSELS

Class I filament-wound vessels for internal pressure uses only can be designed and qualified with any combination of nozzles or openings as allowed in the Code. This does not apply to polar boss openings. To qualify a reduced-in-size nozzle, the design of the reduced-in-size nozzle shall be a scaled version of that used in the qualified vessel, using the identical material, and proper size opening for the reduced-in-size nozzle. No changes to the winding pattern or structure are permitted. The Fabricator can omit or reduce in size any of these nozzles or openings in production vessels. Fabrication of the production vessels shall be identical to the qualified vessel in every way, with the exception of the nozzles or openings that are omitted or reduced in size. Weight allowances for each nozzle or opening that qualifies for omission or reduction in size, inclusive of such items as pad reinforcements that make up omitted or reduced-in-size nozzles or openings, shall be added to the weight determined in accordance with the requirements of RT-213. This total weight, inclusive of the sum of weight reductions for all omitted or reduced-in-size nozzles or openings, shall be at least 95% of the weight specified and recorded in the Production Test Requirements.

RT-210 QUALIFICATION CHECKS AND EXAMINATIONS

Each prototype vessel shall be checked, examined, and inspected in accordance with the requirements of RT-211 through RT-214, and the results shall be recorded in the Fabricator's Design Report.

RT-211 VESSEL THICKNESS

The thickness of each prototype vessel and vessel part shall be determined at a minimum of three points along its length on each of its four quadrants. When vessels are longer than 5 ft (1.5 m), one additional determination

Copyright ASME International (BPVC)

shall be made for each additional 5 ft (1.5 m) or portion thereof. The thickness determinations shall be made with mechanical gages, ultrasonic gages, or other devices having an accuracy of ±2% of true thickness.

Where visual indication of deviation from design thickness exists at points other than those at which measurements are required, thickness determinations in sufficient number to properly locate and define the deviant area shall be made.

RT-212 WEIGHT OF RESIN AND FIBER

The percentage by weight of resin and fiber in each prototype vessel or part shall be determined by means of an ignition test per ASTM D2584 or matrix digestion per ASTM D3171 of a sample taken from an undamaged portion of the vessel used for the pressure qualification test.

RT-213 VESSEL WEIGHT

Each prototype vessel shall be weighed within an accuracy of ±1%. The weight shall be recorded on the applicable Form Q-106, Form Q-107, or Form Q-108.

RT-214 VISUAL EXAMINATION OF VESSELS

The vessel shall be visually checked for imperfections in the laminate. Classification and acceptance level of imperfections shall be according to Table 6-100.1. Fiberglass laminates exposed to corrosive process fluids shall comply with Table 6-100.1 for the pressure side, while structural laminates shall comply with Table 6-100.1 for the nonpressure side.

RT-220 QUALIFICATION TESTS

Qualification tests shall be performed as required by RT-221 through RT-223.

RT-221 BARCOL HARDNESS TESTS

(a) Each prototype vessel and vessel part shall have at least three Barcol hardness determinations made along its length on each of its four quadrants. When vessels are longer than 5 ft (1.5 m), one additional set of determinations shall be made for each additional 5 ft (1.5 m) or portion thereof. A series of readings shall be taken at each quadrant on smooth surfaces, properly oriented, in accordance with ASTM D2583.

(b) The Barcol hardness values thus determined shall be recorded in the Qualification Test Report and on the applicable Form Q-106, Form Q-107, or Form Q-108, and shall be used as reference values in subsequent Production Tests (see RT-440).

RT-222 VOLUMETRIC EXPANSION TESTS

(a) Each prototype vessel shall be subjected to a volumetric expansion test using water or other appropriate liquid, and the results recorded on the applicable Form Q-106, Form Q-107, or Form Q-108.

(b) The volume of liquid used to fill the vessel at atmospheric pressure and temperature shall be compared with that required to fill it at the design pressure and at the same temperature.[18] Care shall be taken to eliminate air pockets to ensure accuracy. The volume of liquid used in each instance shall be determined by any appropriate means, such as a weigh tank which has been calibrated to an accuracy of ±0.2%. The results of this test shall be documented as part of the Qualification Test Report, recorded on the applicable Form Q-106, Form Q-107, or Form Q-108, and subsequently used in the quality control volumetric expansion test.

(c) Alternatively, the volumetric expansion may be determined by measuring the overall length of the vessel and its circumference at 5 ft (1.5 m) intervals along its length, with a minimum of three such determinations being made; all measurements shall be made with instruments that have been calibrated to an accuracy of ±0.05%. These measurements shall be taken with the vessel filled with liquid at atmospheric pressure and at design pressure, both at the same temperature. The measurements thus made shall be documented as part of the Qualification Test Report, recorded on the applicable Form Q-106, Form Q-107, or Form Q-108, and subsequently used in the quality control volumetric expansion test.

RT-223 CYCLIC PRESSURE AND HYDROSTATIC PRESSURE QUALIFICATION TESTS

RT-223.1 Vessels Intended for Internal Pressure Only. (See RT-223.5 for filament-wound vessels with uncut filaments.) At least one prototype vessel, intended for internal pressure service only, shall be subjected to the following tests:[19]

(a) A cyclic pressure test shall be performed in accordance with the following procedures:

(1) The test fluid shall be water or other appropriate liquid.

(2) For vessels without liners, the pressure shall be cycled from minimum[20] pressure to the design pressure and back 100,000 times (except for vessels per RG-404, refer to RT-223.5). The temperature of the test fluid shall be at least 150°F (65°C) or the maximum design temperature of the vessel, whichever is higher. Leakage during cyclic testing is prohibited.

(3) For vessels with a liner, whether integral or not, the pressure shall be cycled from minimum[20] pressure to the design pressure and back 10,000 cycles at the minimum design temperature and for 90,000 cycles at the maximum design temperature (except for vessels

Copyright ASME International (BPVC)

per RG-404, refer to RT-223.5). Leakage during cyclic testing is prohibited

(4) For potable water usage, as described in RG-113 (Section IV application), the pressure shall be cycled 10,000 cycles at the minimum design temperature and 80,000 cycles at the maximum design temperature followed by a final 10,000 cycles during which the vessel is thermally shocked by flushing 80°F (27°C) or less water so that the vessel reaches at least 90°F (32°C) at the completion of the 10,000 cycles. Leakage during cyclic testing is prohibited.

(b) After the cyclic pressure test, a hydrostatic pressure test shall be performed, and the qualification pressure of the vessel shall be determined in accordance with the following procedures:

(1) The test fluid shall be water or other appropriate liquid. The test fluid temperature shall be at least the maximum design temperature of the vessel.

(2) The test pressure shall be applied at a uniform rate so that six times the design pressure is reached in not less than 1 min.

(3) The maximum pressure reached during the test is called the qualification pressure. The qualification pressure shall be at least six times the design pressure. The use of a flexible bladder to enable attainment of the qualification pressure is permissible. However, if the first vessel tested fails to reach six times the design pressure, but does reach 90% of this value, the Fabricator may test at least two more vessels which have been subjected to cyclic pressure tests in accordance with (a) and (b) above. The average of the qualification pressures of these additional vessels, including that of the first vessel, shall be at least six times the design pressure, and no others than the first shall have a qualification pressure of less than six times the design pressure.

RT-223.2 Vessels Intended for Both Internal and External Pressure. At least one prototype vessel intended for both internal and external pressure service shall be subjected to the following tests:

(a) A cyclic pressure test shall be performed in accordance with the requirements of RT-223.1, except that the pressure shall be cycled from the external design pressure to the internal design pressure and back 100,000 times. During the cyclic testing no leakage shall occur. At the Fabricator's option, the cyclic pressure test may be carried out in two steps, as follows:

(1) the pressure shall be cycled from the external design pressure to atmospheric pressure and back 100,000 times without leakage;

(2) the pressure shall be cycled from atmospheric pressure to the internal design pressure and back 100,000 times without leakage.

(b) The prototype vessel with any internal liner installed shall be subjected to an external hydrostatic pressure test, as follows:

(1) the test fluid shall be water or other appropriate liquid;

(2) the temperature of the test fluid shall be 150°F (65°C), minimum;

(3) the external hydrostatic test pressure shall be twice the external design pressure;

(4) the prototype vessel shall show no evidence of buckling.

(c) The prototype vessel, after being subjected to the external hydrostatic pressure test required in (b) above and to the cyclic pressure test required in (a) above, shall then be subjected to a hydrostatic qualification pressure test in accordance with the requirements of RT-223.1(a)(3).

RT-223.3 Vessels Intended for External Pressure Only. At least one prototype vessel intended for external pressure service only shall be tested in accordance with RT-223.2, except that the internal design pressure shall be not less than 15 psig (100 kPa gage).

RT-223.4 Vessels Having Bending and Shear Stresses Inherent in Their Design. At least one prototype vessel of types having bending and shear stresses inherent in their design shall be subjected to a cyclic pressure test and a hydrostatic qualification pressure test in accordance with RT-223.1, RT-223.2, or RT-223.3, whichever is applicable, except that, in addition, the prototype vessel(s) shall be loaded to create the magnitude of bending and shear stresses expected to occur under service conditions.

RT-223.5 Vessels Fabricated per RG-404.2 (Filament Winding — Polar Boss Openings Only) That Are Intended for Internal Pressure Only. At least one prototype vessel shall be subjected to the following tests:[19]

(a) A cyclic pressure test shall be performed in accordance with the following procedures:

(1) The test fluid shall be water or other appropriate liquid.

(2) For vessels without liners, the pressure shall be cycled from minimum[20] pressure to the design pressure and back 33,000 times. The temperature of the test fluid shall be at least 150°F (65°C) or the maximum design temperature of the vessel, whichever is higher. Leakage during cyclic testing is prohibited.

(3) For vessels with a liner, whether integral or not, the pressure shall be cycled from minimum[20] pressure to the design pressure and back 3,000 cycles at the minimum design temperature and for 30,000 cycles at the maximum design temperature. Leakage during cyclic testing is prohibited.

(b) After the cyclic pressure test, a hydrostatic pressure test shall be performed, and the qualification pressure of the vessel shall be determined in accordance with the following procedures:

Copyright ASME International (BPVC)

(1) The test fluid shall be water or other appropriate liquid. The test fluid temperature shall be at least the maximum design temperature of the vessel.

(2) The test pressure shall be applied at a uniform rate so that 5 times the design pressure is reached in not less than 1 min.

(3) The maximum pressure reached during the test is called the qualification pressure. The qualification pressure shall be at least 5 times the design pressure. The use of a flexible bladder to enable attainment of the qualification pressure is permissible. However, if the first vessel tested fails to reach five times the design pressure, but does reach 90% of this value, the Fabricator may test at least two more vessels which have been subjected to cyclic pressure tests in accordance with (a) and (b) above. The average of the qualification pressures of these additional vessels, including that of the first vessel, shall be at least five times the design pressure, and no other vessels than the first shall have a qualification pressure of less than five times the design pressure.

Copyright ASME International (BPVC)

ARTICLE RT-3
QUALITY CONTROL TEST AND EXAMINATION REQUIREMENTS FOR CLASS I VESSELS

RT-300 GENERAL

(a) The tests and examinations stipulated in this Article are intended to provide evidence that the Procedure Specification, previously qualified in accordance with Article RT-2, is being accurately followed and that no deviations have been introduced.

(b) The results of the tests and examinations stipulated in this Article shall be designated as *Quality Control Tests* and shall be recorded and kept on file [see RG-321.1(f)]. They shall be made available to the Inspector for review and acceptance.

RT-301 REQUALIFICATION OF PROCEDURE SPECIFICATION

If a qualified Procedure Specification has not been utilized within the time frames detailed in RT-310, it shall be requalified in accordance with the rules of Article RT-2 before use in fabricating vessels to be marked with the Certification Mark.

RT-310 FREQUENCY OF CYCLIC PRESSURE AND QUALIFICATION PRESSURE TESTS

There are three ways for determining the frequency of cyclic pressure and qualification pressure tests. All vessels subject to requalification tests shall follow the requirements of RT-223. All vessels subject to requalification testing shall be selected at random by the Inspector.

(a) Regardless of the time frequency, one vessel per 1,000 duplicate stamped with the Certification Mark pressure vessels shall be subjected to a cyclic pressure and hydrostatic qualification pressure test.

(b) When a fabricator of Class I vessels stamps with the Certification Mark at least 24 vessels per year, the Fabricator, in collaboration with the Inspector, may increase the time between the requalification of the Procedure Specification, Qualification Cyclic Pressure, and Qualification Pressure Tests, from once a year up to every 3 yr.

(c) If a Fabricator does not stamp with the Certification Mark at least 24 vessels per year, then one vessel per year shall be subjected to a cyclic pressure and hydrostatic qualification pressure test.

RT-320 FREQUENCY OF DETERMINATION OF WEIGHT OF RESIN AND FIBER

At least one determination of the weight of resin and fiber shall be made for every 1,000 duplicate vessels, and at least once a year. The determination shall be made in accordance with RT-212, and the weight of the fiber shall be that specified in the Procedure Specification and within the range specified in RF-200, RF-300, RF-400, or RF-500, as applicable. The vessel to be used for this test shall be selected at random by the Inspector.

RT-330 FREQUENCY OF VOLUMETRIC EXPANSION TESTS

For duplicate vessels a volumetric expansion test in accordance with the requirements of RT-222 shall be performed on one of every 10 vessels and at least once a year. The results of these tests shall not be greater than 105% of the values recorded in the original Qualification Test Report and Procedure Specification. The vessel to be used for this test shall be selected at random by the Inspector.

RT-340 FREQUENCY OF THICKNESS CHECKS

Every vessel and vessel part shall be visually examined, and when there is visual evidence of variation in thickness from that specified in the Fabricator's Design Report, the areas in question shall be explored and their thicknesses determined as required by RT-211. The under thickness deviation shall not exceed 10% for a maximum distance of $0.5\sqrt{Rt}$ from the center of the area which is below the thickness specified in the Fabricator's Design Report, where R is the radius of the shell or head and t is the nominal specified thickness.

Copyright ASME International (BPVC)

ARTICLE RT-4
PRODUCTION TEST REQUIREMENTS FOR CLASS I VESSELS

RT-400 GENERAL

Each vessel shall be subjected to the inspections, examinations, and tests stipulated in this Article and shall comply with the specified requirements, with results recorded in *Production Test Reports*. The hydrostatic tests shall not be conducted until other tests stipulated in this Article have been conducted.

RT-410 VISUAL EXAMINATION

Each vessel shall be visually examined, using a suitable light source, to determine whether there are any imperfections of the type specified in Table 6-100.1. This examination shall be carried out both before and after the hydrostatic leakage test required by RT-450.

RT-411 ACCEPTANCE STANDARDS

RT-411.1 Design Dimensions. Vessels shall be inspected for conformance with dimensions and tolerances shown on the Design Drawings. Any dimension falling outside the specified limits shall be cause for rejection.

RT-411.2 Classification of Imperfections. Classification of visual imperfections in critical areas of fiberglass laminates shall be made in accordance with Table 6-100.1 for the pressure side.

RT-411.3 Imperfections in Noncritical Areas. Imperfections in noncritical areas which by nature, content, or frequency do not affect the serviceability of the vessel shall not exceed the levels for the nonpressure side in Table 6-100.1.

RT-411.4 Inserts, Nuts, Studs, and Lugs. Inserts, nuts, studs, and lugs shall not be damaged in any way nor be coated with laminate material in such a way as to impair function or mechanical fit. Threads in molded-in inserts shall be clean, smooth, and free of nicks, tears, or other damage. There shall be no laminate material or flash on the threads. Molded-in threads or cored holes shall be free of visible defects such as chips, cracks, shorts, etc.

RT-411.5 Repairable Imperfections. Imperfections which can be repaired without affecting the serviceability of the vessel may be repaired unless prohibited by the Fabricator's Design Report.

RT-412 REPAIRS OF IMPERFECTIONS

RT-412.1 Bag-Molded Vessels and Centrifugally Cast Vessels. The Inspector shall first verify that all requirements of Article RI-2 or Article RI-3, as applicable, are met before permitting repair of imperfections.

(a) When required by the Fabricator's Design Report, all cut edges shall be coated with catalyzed resin and cured so that no fibers are exposed and all voids are filled.

(b) When required by the Fabricator's Design Report, crevices between joined pieces shall be filled with catalyzed resin or thixotropic catalyzed resin paste and cured, leaving a relatively smooth surface.

(c) If leaks or weeps are detected during the hydrostatic leakage test (see RT-450 and RT-451), the vessel shall be dried completely before repairing. Catalyzed resin or catalyzed thixotropic resin paste shall be applied on the surface of the vessel over the area which leaked and forced into the microvoids by air at pressure no more than the working pressure of the vessel. Initial repair shall be followed as soon as practicable[21] by complete curing. A retest shall be made for leakage.

(d) Superficial damage to exterior of vessels subsequent to testing may be repaired by patching with reinforced resin, which shall be adequate to restore the original strength. The surface layer of resin shall be ground to a dull finish over the entire area to be repaired and extending a minimum of 2 in. (50 mm) beyond the imperfection. Fiber reinforcement may be in the form of chopped strand mat, woven fiber cloth, or woven roving. Where more than one layer of fiber cloth or woven roving is to be used, a layer of chopped strand mat shall be placed as alternate layers. The repaired area shall be cured to the Barcol hardness established in the Fabricator's Design Report (see RT-221 and RT-440).

The repaired vessel shall be tested as per RT-450 or RT-461, as applicable, and a record of the repair shall be included in the Fabricator's Design Report, and in the Fabricator's Data Report under remarks.

RT-412.2 Filament-Wound Vessels [1,500 psi (10 MPa) Maximum Operating Pressure; See RT-412.3]

(a) When required by the Fabricator's Design Report, all cut edges shall be coated with catalyzed resin and cured so that no fibers are exposed and all voids are filled.

Copyright ASME International (BPVC)

(b) When required by the Fabricator's Design Report, crevices between joined pieces shall be filled with catalyzed resin or thixotropic catalyzed resin paste and cured, leaving a relatively smooth surface.

RT-412.3 Filament-Wound Vessels (For Both General Vessels and Vessels With Polar Boss Openings Only). The Inspector shall first verify that all requirements of Article RI-4 are met before accepting repair of imperfections. Repair of imperfections shall be done in accordance with RT-412.1(c) and/or RT-412.1(d), as applicable, with the provision that after the repair is cured, the vessel shall be pressurized to the required hydrostatic leakage test (see RT-450.1 and RT-450.2) pressure and the repaired area examined for any evidence of crazing or delamination.

RT-412.4 Contact-Molded Vessels. The Inspector shall first verify that all requirements of Article RI-5 are met before permitting repair of imperfections. Repair of imperfections shall be done in accordance with RT-412.1(c) and/or RT-412.1(d), as applicable, with the provision that after the repair is cured, the vessel shall be pressurized to the required hydrostatic leakage test (see RT-450.1 and RT-450.2) pressure and the repaired area examined for any evidence of leakage, crazing, or delamination.

RT-413 VISUAL EXAMINATION OF REPAIRED AREAS

Each repaired area shall be examined visually without the aid of magnification. The repaired area shall have translucency and surface finish comparable to the remainder of the vessel.

RT-420 THICKNESS CHECK

Each vessel shall be subjected to a thickness check in accordance with the requirements of RT-340.

RT-430 VESSEL WEIGHT

Each vessel shall be weighed in accordance with the weight requirements of RT-213. The weight of each vessel shall be at least 95% of the weight specified and recorded in the Fabricator's Qualification Test Report for the prototype vessels, after subtracting the weights associated with those nozzles, or openings, or both as described in RT-202.

RT-440 BARCOL HARDNESS TEST

Each vessel shall be subjected to a Barcol hardness test in accordance with the requirements of RT-221. The Barcol hardness value shall be within the range specified by the resin manufacturer and recorded in the Qualification Test Report and the Procedure Specification.

RT-450 HYDROSTATIC LEAKAGE TEST

RT-450.1 Vessels Without Welded Metal Components. Each completed vessel including production heads shall be subjected to a hydrostatic leakage test using water or other suitable liquid as the test fluid. The test pressure at ambient temperature shall be 1.1 times the design pressure, whether internal or external, and shall be maintained for at least one minute. The vessel shall then be carefully examined for leakage, at design pressure. Vessels that leak shall be rejected unless they can be repaired in accordance with RT-412 and provided that they then pass the stipulated hydrostatic test without leakage.

RT-450.2 Vessels With Welded Metal Components. Each completed vessel including production heads shall be subjected to a hydrostatic leakage test using water or other suitable liquid as the test fluid. The test pressure at ambient temperature shall be 1.3 times the design pressure, whether internal or external, and shall be maintained for at least one minute. The vessel shall then be carefully examined for leakage, at design pressure. Vessels that leak shall be rejected unless they can be repaired in accordance with RT-412 and provided that they then pass the stipulated hydrostatic test without leakage.

When welded metal components can be isolated from the rest of the vessel, it is permitted to test the welded metal components and the rest of the vessel separately. In this specific case, the welded metal components may be tested using RT-450.2 (1.3 times the design pressure) and the rest of the vessel may be tested using RT-450.1 (1.1 times the design pressure).

RT-451 VESSELS WITH LINERS

Vessels having liners shall be tested with liners in place.

RT-452 EXCESSIVE HYDROSTATIC LEAKAGE TEST PRESSURE

When pressurizing vessels during hydrostatic tests, the pressure shall not exceed the required hydrostatic leakage test (see RT-450.1 and RT-450.2) pressure by more than 10%. Exceeding this maximum pressure during the test shall be cause for rejection. To avoid this condition, it is recommended that a properly set safety relief valve be installed on the vessel or in the line supplying the test fluid to it during the test.

Copyright ASME International (BPVC)

RT-460 CONDITIONS UNDER WHICH PNEUMATIC LEAKAGE TEST MAY BE USED

The pneumatic test described herein may be used in lieu of the hydrostatic leakage tests prescribed in RT-450 only if the conditions of RT-460.1 or RT-460.2 apply.

NOTE: Air and gas are hazardous as testing media. It is recommended, therefore, that special precautions be taken when air or gas is used for test purposes.

RT-460.1 When Vessels Cannot Be Safely Filled With Water. Pneumatic testing may be used for vessels which are so designed and/or supported that they cannot be safely filled with water. The tests of such vessels may be made with the vessels partially filled with water, if specified in the Fabricator's Design Report.

RT-460.2 When Traces of Test Fluid Cannot Be Tolerated. Pneumatic testing may be used for vessels not readily dried which are designed for use in services where traces of testing liquid cannot be tolerated.

RT-461 REQUIRED PNEUMATIC TEST PRESSURE AND HOLDING TIME

(a) The test pressure at ambient temperature shall be at least 1.3 times the design pressure and shall be maintained for at least 1 min.

(b) When the test medium is air or gas instead of water or other liquid, the requirements of RT-450 regarding liners, repair of leaks, excessive test pressure, and rejection shall also apply.

RT-461.1 When Vessels Are Pneumatically Tested Under Water

(a) Leakage determination shall be made by testing the vessels while totally submerged in water.

(b) The pressure shall be applied to the vessels only while they are completely submerged in water.

(c) The pressure may be applied gradually in one increment or in increments at the Fabricator's option.

(d) The test pressure shall be maintained for sufficient time to permit examination for leakage of the entire surfaces of the vessels. To accomplish this examination, the vessels shall be slowly rotated so that the entire vessel surfaces can be inspected.

RT-461.2 When Vessel Is Freestanding (Not Under Water)

(a) The pressure in the vessel shall be gradually increased to not more than one-half the test pressure, after which the pressure shall be increased in increments of one-tenth the test pressure until the required test pressure has been reached.

(b) After the test pressure has been maintained for at least 1 min, it shall be reduced to three-fourths of the design pressure and maintained at that pressure for sufficient time to permit examination for leakage of the entire surface of the vessel and its attachments by means of soapsuds applied thereto.

Copyright ASME International (BPVC)

ARTICLE RT-5
HYDROSTATIC TESTING PROCEDURES AND EQUIPMENT FOR CLASS I AND CLASS II VESSELS

RT-500 PROVISION OF VENTS AT HIGH POINTS

Vents shall be provided at all high points of the vessel in the test position to purge possible air pockets while the vessel is being filled with the test fluid.

RT-501 EXAMINATION OF TEST EQUIPMENT

Before applying pressure, the test equipment shall be examined to see that it is leak tight and that all low-pressure filling lines and other appurtenances that should not be subjected to the test pressure have been disconnected or isolated by valves or other suitable means.

RT-502 RATE OF APPLYING TEST PRESSURE

The pressure in Class I vessels shall be gradually increased to not more than one-half the test pressure, after which the pressure shall be increased in steps of one-tenth of the test pressure until the required test pressure has been reached. Class II vessels shall be pressurized in accordance with Article RT-6.

(19) RT-510 TEST GAGES

(a) An indicating pressure gage shall be connected directly to the vessel or with a pressure line that does not include intermediate valves. If the indicating gage is not readily visible to the operator controlling the pressure applied, an additional indicating gage shall be provided where it shall be visible to the operator throughout the duration of the test. For large vessels, it is recommended that a recording gage be used in addition to indicating gages.

(b) Dial indicating pressure gages used in testing shall be graduated over a range of about double the intended maximum test pressure, but in no case shall the range be less than $1\frac{1}{2}$ nor more that 4 times that pressure. A digital reading pressure gage having a wider range of pressure may be used provided the readings give the same or greater degree of accuracy as obtained with a dial pressure gage which meets the above range requirement of $1\frac{1}{2}$ to 4 times the maximum test pressure.

(c) All gages shall be calibrated against a standard deadweight tester or a calibrated master gage. Gages shall be recalibrated once every 6 months or at any time that there is reason to believe that they are in error.

RT-520 CALIBRATION OF ACOUSTIC EMISSION EQUIPMENT

Acoustic emission equipment used for acceptance tests of Class II vessels shall be calibrated per Section V, Article 11, Acoustic Emission Examination of Fiber-Reinforced Plastic Vessels.

Copyright ASME International (BPVC)

ARTICLE RT-6
ACCEPTANCE TEST PROCEDURE FOR CLASS II VESSELS

RT-600 GENERAL

The tests stipulated in this Article are intended to verify that a vessel that was designed and fabricated according to Article RD-11 is free of structural defects and is suitable for the pressure and temperature for which it was designed. Such tests are nondestructive and are intended to verify individual vessels for specific services. Vessels which comply with the Design Specification and pass the Acceptance Test may be marked with the Certification Mark after the Inspector has ensured that the provisions of this Code have been satisfied.

RT-610 ACCEPTANCE CHECKS AND EXAMINATIONS

Each Class II vessel shall be checked and examined in accordance with the requirements of RQ-140, and the results recorded in the Acceptance Test Report, which shall become part of the Fabricator's Design Report.

(a) The acoustic emission examination shall be in accordance with the requirements of this Article and ASTM E1067. Where the provisions of this Article differ from those of ASTM E1067, the provisions of this Article shall govern.

(b) Vessel Conditioning. The internal pressure in the vessel shall not exceed 10% of the test pressure for 12 hr prior to the acoustic emission examination and 110% of the test pressure any time before the acoustic emission examination.

(c) Instrumentation shall be as detailed in ASTM E1067, paragraph 7. The recommended and preferred instrument features listed in paragraph 7.2 are required. Peak-amplitude detection for each input channel is required. Time of arrival shall be measured to an accuracy of 1 μsec. All test data, including time and pressure, shall be recorded for post-test playback and analysis. The data acquisition threshold shall be at or below the threshold of detectability defined in ASME E1067, paragraph A2.2.

(d) Sensor locations and spacing shall be according to ASTM E1067, paragraph 9.3. The attenuation characterization shall be performed in the hoop and longitudinal directions and at 45 deg to the axis of the vessel. Additional lead breaks may be necessary to accurately determine the maximum sensor spacing in each direction. The requirement that the attenuation characterization be performed above the liquid line shall not apply to vessels. Regardless of vessel size, at least two sensors shall be used so that electromagnetic interference is easily detected by simultaneity of arrival.

(e) Data Acquisition. Test data shall be recorded for the entire pressurization cycle. Data acquired during pressurization from 50% to 100% of the test pressure and from the final 30-min pressure hold shall be recorded and used to evaluate the vessel.

RT-620 ACCEPTANCE TESTS

Each Class II vessel shall be subjected to programmed increasing stress levels to 1.1 times the internal design pressure while being monitored by sensors that detect acoustic emission (stress waves) caused by growing structural imperfections.

(a) The test fluid shall be water or other appropriate liquid.

(b) The temperature of the test fluid shall be in the following range:

(1) Minimum Value. The temperature that is sufficient to ensure that the vessel wall temperature is not less than 40°F (5°C).

(2) Maximum Value. The design temperature. If the design temperature is less than 100°F, the maximum value shall be 100°F (38°C).

(c) External test pressure shall be 1.0 times the external design pressure.

NOTE: Attainment of external pressure as full vacuum by reducing the pressure inside of a vessel is not possible due to the limitations of evacuation equipment. Where vacuum tests are required, the User or User's Agent, the Authorized Inspector, and the Fabricator shall agree on the maximum allowable absolute pressure to be achieved during the test. Such agreement shall be reached prior to the start of fabrication and shall be documented in the User's Design Specification and the pressure test report.

(d) The loadings in RD-120(a) and RD-120(c) shall be applied as part of the Acceptance Test procedure. Stressing to simulate external loads as per RD-120 should be agreed upon by the User or User's Agent, the Authorized Inspector, and the Fabricator prior to fabrication.

(e) Pressurization shall not exceed a rate of 2% of the maximum test pressure per minute.

(f) The acoustic emission examination procedure shall be in accordance with ASTM E1067.

Copyright ASME International (BPVC)

Table RT-620.1
Evaluation Criteria

Criteria	First Loading	Subsequent Loadings
Emissions during pressure hold	Not greater than five events per minute beyond 2 min with an amplitude greater than A_M [Note (1)]	No events beyond 2 min with an amplitude greater than A_M [Note (1)] E_H = 0 events
Felicity ratio	...	0.95
Cumulative duration, N_D [Note(2)]	Less than N_D	Less than $N_D/2$
High amplitude hits [Note (3)]	≤10	≤5

GENERAL NOTE: All criteria in [Note (1)] through [Note (3)] are per channel.

NOTES:
(1) A_M is the decibel level defined in ASTM E1067, paragraph A2.5.
(2) Cumulative duration value N_D is defined in ASTM E1067, paragraph A2.5.
(3) High amplitude hits are those having amplitude equal to or greater than the Reference Amplitude Threshold defined in ASTM E1067, paragraph A2.3.

(g) Evaluation and acceptance criteria shall be in accordance with Table RT-620.1 of this Section. An acceptable vessel shall meet all the criteria listed in Table RT-620.1.

(h) The vessel shall be evaluated against the subsequent loading criteria after hydrostatic pressure testing to 1.1 times the internal design pressure. The vessel shall be conditioned prior to acoustic emission examination by holding at reduced pressure as required in ASTM E1067. The vessel may be evaluated under first loading with agreement between the User and Fabricator.

(i) If a vessel is unacceptable by the first loading criteria, it may be retested and judged against the criteria for subsequent loadings. Prior to retest, the vessel shall be conditioned by holding at reduced pressure as required in ASTM E1067. The pressure vessel stressing sequence for the retest shall be as required in ASTM E1067.

(j) Leakage shall not occur during the Acceptance Test.

(k) The preferable test position is in the specified operating position.

RT-621 VESSELS INTENDED FOR INTERNAL PRESSURE ONLY

Vessels which are designed for internal pressure only shall be pressurized in accordance with the sequence shown in ASTM E1067.

RT-622 VESSELS INTENDED FOR BOTH INTERNAL AND EXTERNAL PRESSURE

Vessels intended for both internal and external pressure shall be pressurized in accordance with the sequence shown in ASTM E1067. In addition, the vessel shall be tested to the requirements of RT-621.

RT-623 REPAIRED VESSELS

The following procedure shall be used to retest a vessel that has been tested under the provisions of this Article and has subsequently been repaired.

(a) Load the vessel as specified in this Article (AE monitoring not required).

(b) Hold the maximum load for at least 30 min.

(c) Condition the vessel by holding at reduced load as required by ASTM E1067.

(d) Retest the vessel as required by this Article.

(e) The vessel shall be judged against the evaluation criteria for subsequent loadings.

RT-630 PENETRANT EXAMINATION

If a vessel fails the acoustic emission test specified in this Article, liquid penetrant examination may be used to assist in determining the nature of the defect. Except as noted in this paragraph, examination shall be in accordance with Section V, Article 6.

(a) A water-washable penetrant shall be used.

(b) The color of the penetrant shall be selected to contrast with the color of the fiber-reinforced plastic.

(c) The dwell time shall be a minimum of 20 min.

(d) A developer shall not be used.

(e) Interpretation shall be made within 1 hr of drying to the requirements of Section V, Article 6, T-674.

Copyright ASME International (BPVC)

ARTICLE RT-7
DETERMINATION OF MECHANICAL PROPERTIES OF LAMINA FOR USE WITH CLASS II VESSELS

RT-700 REQUIRED MECHANICAL PROPERTIES OF THE LAMINA

There are four elastic constants (E_x, E_y, E_s, ν_x) and five strength constants (X, X_c, Y, Y_c, S) to be determined for a lamina.

E_s = in-plane longitudinal shear modulus
E_x = modulus along the fiber direction
E_y = modulus transverse to the fiber direction; for a mat layer, E_y is taken to be E_x
S = in-plane shear strength
X = tensile strength along the fiber direction
X_c = compressive strength along the fiber direction
Y = tensile strength transverse to the fiber direction
Y_c = compressive strength transverse to the fiber direction
ν_x = major Poisson's ratio (it is the negative of the strain transverse to the fiber direction divided by the strain along the fiber direction when a uniaxial stress is applied along the fiber direction)

RT-701 LAMINA TEST

Test coupons for contact-molded lamina shall be cut from flat plate laminates of resin and fiber combinations that represent the orthotropic lamina under consideration. Test coupons for filament-wound lamina shall be made from hoop-wound filament cylinders. The test coupons shall be made from the same materials (or combination of materials) so as to define each of the different types of lamina specified in the Procedure Specification. The test coupons shall be of sufficient thickness to give representative test results from the specified ASTM procedures. The fiber content of the test coupon shall be between 90% and 100% by weight of the minimum fiber content of the vessel or vessel part laminate as specified in the Procedure Specification. Test methods for determination of engineering properties are specified in RT-703 and RT-704.

The results of the test shall be documented in a report designated as the *Material Property Test Report*, which shall become part of the Fabricator's Design Report.

RT-702 LAMINATE ELASTIC PROPERTIES

Elastic properties of the laminate used to fabricate a Class II vessel part shall be determined by the mathematical treatment of the individual lamina in accordance with Article RD-12.

Longitudinal tensile strength X for a filament-wound layer shall be determined either by test of a flat plate coupon in accordance with ASTM D3039 or by continuing the pressure test of a filament-wound cylinder per ASTM D1180 (as described in RT-703.1) to fracture.

RT-703 ELASTIC AND STRENGTH CONSTANTS FOR MAT, KNITTED FABRIC, OR WOVEN ROVING REINFORCED LAMINA

RT-703.1 Modulus, E_x, and Tensile Strength, X. Modulus and tensile strength shall be determined by performing a tensile test to failure on a tensile coupon according to ASTM D3039 or ASTM D638. The coupon shall have a thickness variation not exceeding 15% of the mean of the thickest and thinnest parts of the coupon. The coupon shall have a degree of flatness such that no straight-line deviation of more than 0.020 in. per 12 in. (0.55 mm per 305 mm) length shall occur.

RT-703.2 Compressive Strength, X_c. Compressive strength shall be determined on a flat coupon according to ASTM D3410 or ASTM D695.

RT-703.3 Modulus, E_y, and Transverse Tensile Strength, Y. Modulus and transverse tensile strength shall be determined by performing a tensile test on a flat coupon according to ASTM D3039 or ASTM D638.

RT-703.4 Transverse Compressive Strength, Y_c. Transverse compressive strength shall be determined on a flat coupon according to ASTM D3410 or ASTM D695.

RT-703.5 Shear Modulus, E_s, and Shear Strength, S. Shear modulus for an all mat lamina shall be obtained either from the longitudinal modulus and Poisson's ratio by the equation: (19)

$$E_s = \frac{E_x}{2(1 + \nu_x)}$$

Copyright ASME International (BPVC)

or according to ASTM D4255 or ASTM D7078.

Shear modulus for a knitted matrix fabric or a woven roving lamina shall be determined according to ASTM D4255 or ASTM D7078.

Shear strength for an all mat lamina shall be determined according to ASTM D3846, ASTM D4255, or ASTM D7078.

Shear strength for a knitted matrix fabric or a woven roving lamina shall be determined according to ASTM D4255 or ASTM D7078.

RT-703.6 Flexural Modulus, E_f, and Flexural Strength, S_f. These shall be determined according to ASTM D790.

RT-703.7 Major Poisson's Ratio, ν_x. The major Poisson's ratio shall be determined by measuring longitudinal and transverse strain during the test specified in RT-703.1.

RT-703.8 Minor Poisson's Ratio, ν_y. The minor Poisson's ratio shall be determined by measuring longitudinal and transverse strain during the test specified in RT-703.3, or from the equation $\nu_y = E_y\nu_x/E_x$.

RT-704 ELASTIC AND STRENGTH CONSTANTS FOR FILAMENT-WOUND LAMINA

RT-704.1 Modulus, E_x, and Tensile Strength, X. Modulus and tensile strength for a filament-wound lamina shall be determined by performing a pressure test to failure on a hoop-wound cylinder in a manner similar to that specified in ASTM D2992 and the underlying test methods. The following stipulations and additions shall apply:

(a) At least five specimens shall be tested for each test condition.

(b) All specimens shall be hoop-wound (approximately 90 deg) with a single tow and enough layers to meet the minimum thickness criterion.

(c) The hoop-wound cylindrical portion of the specimens shall meet the fiber content criteria of RT-701.

(d) Specimen end closures shall be *restrained ends* as defined in 1.4.1 of ASTM D2992.

(e) The internal diameter of the cylinder shall be not less than 4 in.

(f) The clear length of the cylinder between the structural buildup at the ends of the cylinder shall be not less than five times the outside diameter of the cylinder.

(g) The thickness of the hoop-wound portion of the cylinder shall be at least 0.1 in.

(h) The hoop-wound cylindrical portion of the specimens shall have a thickness variation not exceeding 15% of the mean of the thickest and thinnest parts of the cylinder.

(i) The cylinder shall be instrumented with three hoop oriented unidirectional strain gages on the external surface at the mid-length of the cylinder. The three strain gages shall be mounted 120 deg apart around the circumference.

(j) In order to obtain a measure of the lamina tensile strength, the final failure of the cylinder must be due to fracture of the hoop-wound fibers. To ensure that this type failure occurs, the closures shall be designed so that they do not cause failure of the specimen. This can be accomplished by adding a tapered buildup of mat, knitted fabric, or woven roving to the end of the specimens.

(k) A flexible internal corrosion barrier may be used to prevent circumferential cracking and failure in the circumferential direction.

(l) A corrosion barrier or an elastomeric bladder may be used to prevent excessive leakage that would prevent application of pressure to a level that would cause fracture of the hoop fibers.

(m) The contribution of a bladder or corrosion barrier to the hoop strength of the cylinder shall be no more than 2%. The thickness of the corrosion barrier shall be ignored in determination of the modulus.

RT-704.2 Compressive Strength, X_c. Compressive strength for filament-wound lamina along the fiber direction shall be taken as equal to the tensile strength.

RT-704.3 Modulus, E_y, and Transverse Tensile Strength, Y. Modulus and transverse tensile strength shall be determined by performing a tensile test on a hoop-wound cylinder according to ASTM D5450.

RT-704.4 Transverse Compressive Strength, Y_c. Transverse compressive strength shall be determined on a hoop-wound cylinder according to ASTM D5449.

RT-704.5 Shear Modulus, E_s, and In-Plane Shear Strength, S. Shear modulus and shear strength shall be determined on a hoop-wound cylinder loaded in torsion according to ASTM D5448.

RT-704.6 Major Poisson's Ratio, ν_x. The major Poisson's ratio shall be determined according to ASTM D5450.

Copyright ASME International (BPVC)

ARTICLE RT-8
TEST METHODS FOR DETERMINING DAMAGE-BASED DESIGN CRITERION

RT-800 SCOPE

This Article details the test methods for establishing the direct stress and shear stress damage-based design values for use in the damage-based design criterion. The method uses data derived from acoustic emission monitoring of four-point beam bending tests and in-plane shear tests.

The onset of lamina damage is indicated by the presence of significant acoustic emission during the reload portion of load/reload cycles. "Significant emission" is defined with historic index.

(19) RT-810 REFERENCED DOCUMENTS

ASTM D790, Standard Test Methods for Flexural Properties of Unreinforced and Reinforced Plastics and Electrical Insulating Materials

ASTM D4255, Standard Test Method for In-Plane Shear Properties of Polymer Matrix Composite Materials by the Rail Shear Method

ASTM D7078, Standard Test Method for Shear Properties of Composite Materials by V-Notched Rail Shear Method

ASTM E1316, Standard Terminology for Nondestructive Examinations

ASTM E2478, Standard Practice for Determining Damage-Based Design Stress for Glass Fiber Reinforced Plastic (GFRP) Materials Using Acoustic Emission.

RT-820 APPARATUS, LOADING PROCEDURE, AND DATA ANALYSIS

ASTM E2478 is adopted in its entirety.

Copyright ASME International (BPVC)

PART RI
INSPECTION REQUIREMENTS

ARTICLE RI-1
GENERAL

RI-100 SCOPE

The inspection and examination of all pressure vessels and vessel parts shall comply with the general requirements set forth in this Article. The special requirements for vessels made by the bag molding, centrifugal casting, filament winding, and contact-molding processes are provided in Articles RI-2, RI-3, RI-4, and RI-5.

RI-101 FABRICATOR'S RESPONSIBILITY

The Fabricator who completes any vessel to be stamped with the Certification Mark (see RS-110) has the responsibility of complying with all the requirements of this Code and, through proper certification, of assuring that any work performed by others also complies with all requirements of this Code including the required inspections by an Authorized Inspector.

RI-110 QUALIFICATION OF INSPECTORS

All references throughout this Section to *Inspector* mean Authorized Inspector as defined in this paragraph. The inspection required by this Article shall be carried out by an Inspector employed by an ASME accredited Authorized Inspection Agency, as defined in QAI-1. The Inspector shall not be in the employ of the Fabricator.

RI-120 ACCESS FOR INSPECTOR

The Fabricator of the vessel shall arrange for the Inspector to have free access to such parts of all plants as are concerned with the manufacture of materials for the vessel, when so requested. The Inspector shall be permitted free access, at all times while work on the vessel is being performed, to all parts of the Fabricator's shop that concern the fabrication of the vessel, during the period of assembly and testing of the vessel. The Fabricator shall keep the Inspector informed of the progress of the work and shall notify the Inspector, reasonably in advance, when vessels will be ready for any required tests or inspections.

RI-130 INSPECTOR'S DUTIES

RI-131 INSPECTOR'S DUTY RELATIVE TO QUALIFICATION TESTS OF PROTOTYPE VESSELS

The Inspector shall verify the cyclic pressure tests and witness the hydrostatic qualification pressure tests (see RT-223) of the prototype vessels by means of which the vessel design and the fabrication procedure are qualified.

RI-132 INSPECTOR'S DUTY RELATIVE TO THE FABRICATOR'S DESIGN REPORT

The Inspector shall determine that the Fabricator's Design Report is on file and shall examine it to verify that:

(a) the vessel conforms to the Design Drawings in all respects;

(b) the materials being used and the fabrication procedures being employed are in strict compliance with the requirements of the Procedure Specification;

(c) the Quality Control Program which was accepted by ASME prior to issuance of the Certificate of Authorization is being followed routinely and that the tests required by it confirm that the Procedure Specification requirements are being met;

(d) the vessel design, as demonstrated by the Test Report for Class I vessels or by Design Calculations and Acceptance Test for Class II vessels, meets the requirements of this Code.

RI-133 INSPECTOR'S DUTY RELATIVE TO SPECIFIC VESSELS

The Inspector of vessels to be marked with the Certification Mark has the duty to ensure that all requirements of this Section have been met. The Inspector shall make all required inspections and other such inspections as the Inspector deems necessary in carrying out these duties.

Copyright ASME International (BPVC)

RI-134 INSPECTOR'S DUTY RELATIVE TO ACCEPTANCE TESTING OF CLASS II VESSELS

The Inspector shall verify that

(a) the materials (resin, reinforcements, etc.) used to fabricate the vessel laminate are as specified in the required Procedure Specification;

(b) the laminates used for vessel fabrication meet the same specifications as the laminates from which mechanical properties were determined for Design Calculations;

(c) the thickness of vessel parts and other fabrication details conform to Design Calculations and vessel drawings;

(d) the hydrostatic stressing sequence and acoustic emission response during stressing comply with the required specifications.

RI-140 INSPECTION OF MATERIAL

(a) The Inspector shall ensure that all materials used in the fabrication of the vessel comply with the requirements of this Section and the Design Specification.

(b) All parts to be incorporated into the completed pressure vessel, whether or not produced by the Fabricator, shall be inspected before assembly into the completed vessel for the purpose of detecting, as much as possible, any imperfections which would not meet the requirements of this Code.

RI-150 INSPECTION DURING FABRICATION

(a) The Inspector shall make inspections, including making measurements, of each pressure vessel at such stages of fabrication as are required plus such other inspections as the Inspector deems are necessary to ensure that fabrication is in accordance with the requirements of this Section.

(b) When conditions permit entry into the vessel, as complete an examination as possible shall be made before final closure.

(c) An inspection shall be made at the time of the hydrostatic leakage test or its permissible equivalent.

(d) The Inspector shall verify that the required stamping (or permitted marking) is applied to the nameplate and that the nameplate is attached to the proper vessel.

RI-160 ALTERNATIVE INSPECTION FOR MULTIPLE, DUPLICATE FABRICATION

During the fabrication of multiple, duplicate mass-produced pressure vessels, it may become impractical for the Inspector to personally perform each of the required inspections. For these specific cases, the Fabricator, in collaboration with the Inspector, may prepare an alternative inspection and quality control procedure, set forth in complete detail, and the method by which the requirements of this Section are maintained.

To qualify for this alternative method of inspection, the following criteria shall be met:

(a) This procedure shall be included in the Fabricator's written quality control system (see RG-323).

(b) This procedure shall be submitted to and shall have received the acceptance of the Authorized Inspection Agency.

(c) This procedure shall then be submitted by the Authorized Inspection Agency for written acceptance from the local jurisdiction concerned (see RG-323) and from the ASME Designee.

(d) The joint review required by RG-323 shall include an ASME Designee.

(e) The inspection procedure shall be used in the plant of the named Fabricator by the Authorized Inspection Agency submitting it, and shall be carried out by an Inspector in the employ of that Authorized Inspection Agency.

(f) The degree of the Authorized Inspector's involvement shall be as defined during the joint review. Any change requires another joint review.

(g) Any changes in this inspection and quality control procedure that affect the requirements of this Section are subject to review and acceptance by the parties required for a joint review.

(h) The Data Report for such a vessel shall include under "Remarks" the statement: "Constructed under the provisions of RI-160."

Copyright ASME International (BPVC)

ARTICLE RI-2
SPECIAL INSPECTION REQUIREMENTS FOR BAG MOLDING (CLASS I VESSELS)

RI-200 CHECK OF BAG-MOLDING PROCEDURE SPECIFICATION QUALIFICATION

The Inspector shall examine the Fabricator's Procedure Specification and shall verify that the procedure for the bag-molding process has been properly qualified as required by Part RQ.

RI-201 ADDITIONAL TESTS

At his discretion, the Inspector shall have the right to call for and witness additional tests of the bag-molding procedure and of the vessel as work progresses.

RI-202 CHECK OF FIBER WEIGHT

The Inspector shall verify that the fiber weight of preforms and of side wall mats complies with the requirements of RF-200 and RT-320.

RI-203 CHECK OF FORM OF REINFORCEMENT

The Inspector shall verify that the form of fiber reinforcement used in the shell and in the heads complies with the requirements of RF-210.

RI-204 CHECK OF FABRICATION PROCEDURES

The Inspector shall verify that the resin injection pressure, processing temperatures during lay-up, and pumping procedures correspond to those stipulated in the qualified Procedure Specification used.

RI-205 CHECK OF CURE

(a) The Inspector shall ensure by suitable hardness tests or by other means that the bag-molded composite structure has been properly cured.

(b) A post cure, after removal of the vessel from the mold, if required, shall be for the time and temperature specified in the qualified Procedure Specification (see Form Q-106) and shall be verified by the Inspector.

RI-206 CHECK OF UNIFORMITY OF HEATING FOR CURE OF VESSEL

The Inspector may require the Fabricator to demonstrate that operation of the heating system provides uniform heating over the entire surface of the vessel during curing. The temperature shall not differ by more than ±10°F (±6°C) from the cure temperature specified in the qualified Procedure Specification used (see Form Q-106).

RI-210 VISUAL INSPECTION

Where possible, the Inspector shall inspect both the inside and outside of the bag-molded pressure vessel. The Inspector shall examine the vessel for the following defects: indentations, cracks, porosity, air bubbles, exposed fibers, lack of resin, excess resin, thin areas, wrinkling, uniformity of seal surface, and delamination (see RT-411, RT-412, and RT-413).

RI-211 TESTS AND RETESTS

The physical property tests of specimens of material, hydrostatic or pneumatic leakage tests, cyclic pressure and hydrostatic qualification pressure tests, and any permitted retests, all stipulated in Part RT, shall be documented and certified by the Fabricator and verified by the Inspector.

Copyright ASME International (BPVC)

ARTICLE RI-3
SPECIAL INSPECTION REQUIREMENTS FOR CENTRIFUGAL CASTING (CLASS I VESSELS)

RI-300 CHECK OF CENTRIFUGAL-CASTING PROCEDURE SPECIFICATION QUALIFICATION

The Inspector shall examine the Procedure Specification and shall determine that the procedure for the centrifugal-casting process has been properly qualified as required by Part RQ.

RI-301 ADDITIONAL TESTS

The Inspector shall have the right to call for and witness additional tests of the centrifugal-casting procedure and of the vessel as fabrication progresses.

RI-302 CHECK OF FIBER WEIGHT

The Inspector shall verify that the fiber weight of the composite of fiber and resin complies with the requirements of RF-300 and RT-320.

RI-303 CHECK OF FORM OF REINFORCEMENT

The Inspector shall verify that the filament length of the chopped strand is not less than 1 in. or more than 4 in., as required by RF-300.

RI-304 CHECK OF FABRICATION PROCEDURES

The Inspector shall verify that the speed of mandrel rotation during buildup of the wall corresponds to that stipulated in the qualified Procedure Specification (see Form Q-106).

RI-305 CHECK OF CURE

(a) The Inspector shall ensure by suitable hardness tests or by other means that the centrifugally cast cylinder has been properly cured.

(b) A post cure, after removal of the vessel from the mandrel, if required, shall be for the time and temperature specified in the qualified Procedure Specification (see Form Q-106) and verified by the Inspector.

RI-306 CHECK OF UNIFORMITY OF HEATING FOR CURE OF THE VESSEL

The Inspector may require the Fabricator to demonstrate that the mandrel heating system provides uniform heating of the entire surface of the vessel during cure. The temperature shall not differ by more than ±10°F (±6°C) from the cure temperature specified in the qualified Procedure Specification (see Form Q-106).

RI-307 CHECK OF ATTACHMENT OF HEADS TO CYLINDER

RI-307.1 Heads Attached by Adhesive Bonding. The Inspector shall verify that the adhesive used, the preparation of the surfaces to be joined, and the application of the adhesive conform to the Procedure Specification for qualification of adhesive bonding (Form Q-115).

RI-307.2 Cylinders Centrifugally Cast Into or Onto Heads. If the alternative procedure of centrifugally casting cylinders directly into or onto the head skirt is used, the Inspector shall verify that it follows the qualified procedure for such attachment.

RI-310 VISUAL INSPECTION

Where possible, the Inspector shall inspect both the inside and outside of the centrifugally cast cylinder and the bag- or matched-die-molded heads before assembly. The Inspector shall examine the cylinder and head for the following defects: surface crazing or cracking, lack of resin, excess resin, thin areas, air bubbles, exposed fibers, wrinkling, uniformity of sealing surface, and delamination (see RT-411, RT-412, and RT-413).

RI-311 TESTS AND RETESTS

The physical property tests of specimens of material, laminate hydrostatic or pneumatic leakage tests, cyclic pressure and hydrostatic qualification pressure tests, and any permitted retests, all stipulated in Part RT, shall be documented and certified by the Fabricator and verified by the Inspector.

Copyright ASME International (BPVC)

ARTICLE RI-4
SPECIAL INSPECTION REQUIREMENTS FOR FILAMENT WINDING

RI-400 CHECK OF FILAMENT-WINDING PROCEDURE SPECIFICATION QUALIFICATION

The Inspector shall examine the Fabricator's Procedure Specification and shall verify that the procedure for the filament-winding process has been properly qualified as required by Part RQ.

RI-401 ADDITIONAL TESTS

The Inspector shall have the right to call for and witness additional tests of the filament-winding process.

RI-402 CHECK OF FIBER WEIGHT

The Inspector shall verify that the fiber weight of the combined fiber filaments and resin complies with requirements of RF-400 and RT-320.

RI-403 CHECK OF MATERIALS

The Inspector shall verify that the fiber, resin, and curing agent being used are as described in the Procedure Specification (see Form Q-107).

RI-404 CHECK OF FABRICATION PROCEDURES

The Inspector shall verify that the speed of winding, uniformity of tension, and adherence to the predetermined patterns of the qualified Procedure Specification (see Form Q-107) are closely followed.

RI-405 CHECK OF CURE

(a) The Inspector shall ensure by suitable hardness tests, or by other means, that the filament-wound structure has been properly cured.

(b) A post cure, if required, after removal of the mandrel, shall be for the time and temperature specified in the qualified Procedure Specification (see Form Q-107) and shall be verified by the Inspector.

RI-406 CHECK OF UNIFORMITY OF HEATING FOR THE CURE OF THE VESSEL

The Inspector may require the Fabricator to demonstrate that operation of the heating system provides uniform heating over the entire surface of the vessel during cure. The temperature shall not differ by more than ±10°F (±6°C) from the cure temperature specified in the qualified Procedure Specification (see Form Q-107).

RI-410 VISUAL INSPECTION

Where possible, the Inspector shall inspect both the inside and outside of the filament-wound pressure vessel. The Inspector shall examine the vessel for the following defects: indentations, cracks, porosity, air bubbles, exposed fibers, lack of resin, excess resin, thinned areas, wrinkling, pattern deviations, and delamination (see RT-411, RT-412, and RT-413).

RI-411 TESTS AND RETESTS

The physical property tests of specimens of material, hydrostatic or pneumatic leakage tests, cyclic pressure and hydrostatic qualification pressure tests, and any permitted retests, all stipulated in Part RT, shall be documented and certified by the Fabricator and verified by the Inspector.

Copyright ASME International (BPVC)

ARTICLE RI-5
SPECIAL INSPECTION REQUIREMENTS FOR CONTACT MOLDING

RI-500 CHECK OF CONTACT-MOLDING PROCEDURE SPECIFICATION QUALIFICATION

The Inspector shall examine the Fabricator's Procedure Specification and shall determine that the procedure for the contact-molding process has been properly qualified as required by Part RQ.

RI-501 ADDITIONAL TESTS

The Inspector shall have the right to call for and witness additional tests of the contact-molding procedure and of the vessel as fabrication progresses.

RI-502 CHECK OF FIBER WEIGHT

The Inspector shall verify that the fiber weight of the composite structure and supplementary pads at openings complies with the requirements of RF-500.

RI-503 CHECK OF FORM OF REINFORCEMENT

The Inspector shall verify that the fiber reinforcement used in the shell and in the heads complies with the requirements of RF-510.

RI-504 CHECK OF FABRICATION PROCEDURES

The Inspector shall verify that the laminating sequence, cure system, method of component attachments, and overall quality correspond to those stipulated in the qualified Procedure Specification.

RI-505 CHECK OF CURE

(a) The Inspector shall ensure by suitable hardness tests or by other means that the contact-molded composite structure has been properly cured.

(b) A post cure, after removal of the vessel from the mold, if required, shall be for the time and temperature specified in the qualified Procedure Specification (see Form Q-108) and shall be verified by the Inspector.

RI-506 CHECK OF UNIFORMITY OF HEATING FOR POST CURE OF VESSEL IF REQUIRED

The Inspector may require the Fabricator to demonstrate that operation of the heating system provides uniform heating over the entire surface of the vessel during cure. The temperature shall not differ by more than ±10°F (±6°C) from the cure temperature specified in the qualified Procedure Specification (see Form Q-108).

RI-510 VISUAL INSPECTION

Where possible, the Inspector shall inspect both the inside and outside of the pressure vessel. The Inspector shall examine the vessel for the following imperfections: indentations, cracks, porosity, air bubbles, exposed fibers, lack of resin, excess resin, thin areas, wrinkling, uniformity of seal surface, and delamination (see RT-411, RT-412, and RT-413).

RI-511 TESTS AND RETESTS

The physical property tests of specimens of material, hydrostatic or pneumatic leakage tests, cyclic pressure and hydrostatic qualification pressure tests, and any permitted retests, all stipulated in Part RT, shall be documented and certified by the Fabricator and verified by the Inspector.

Copyright ASME International (BPVC)

PART RS
MARKING, STAMPING, AND REPORTS

ARTICLE RS-1
CONTENTS, METHODS, AND MEANS OF MARKING

RS-100 REQUIRED MARKING FOR VESSELS

Each pressure vessel shall be marked, by means other than stamping directly on the vessel (see RS-130), with the following:

(a) the official Certification Mark as shown in Figure RS-100.1 with the RP Designator directly under the Certification Mark;

(b) the words "Class I," "Class II," or "Class III," as applicable, followed by the type of fabricating process, indicated by the letters BM, CC, CM, or FW;

(c) the Fabricator's name, preceded by "Certified by";

(d) the maximum allowable working pressure ___ at maximum allowable temperature ___ ;

(e) maximum allowable external working pressure[22] ___ at maximum allowable temperature ___ ;

(f) the minimum allowable temperature [not less than −65°F (−54°C)];

(g) the Fabricator's serial number;

(h) the year built.

NOTE: Section IV vessels that use reinforced polymer parts shall be marked with the letters HLW, in accordance with Code Case 2411 or 2725.

Figure RS-100.1
Official Certification Mark to Denote the American Society of Mechanical Engineers' Standard

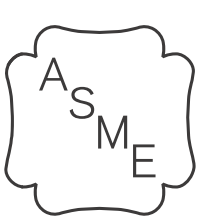

RS-101 METHODS OF MARKING VESSELS WITH TWO OR MORE INDEPENDENT CHAMBERS

Either of the arrangements specified in RS-101.1 and RS-101.2 may be used in marking vessels having two or more independent pressure chambers designed for the same or different operating conditions. Each detachable chamber shall be marked to identify it positively with the combined unit.

RS-101.1 Markings Grouped in One Location. The markings may be grouped in one location on the vessel, provided they are arranged to indicate clearly the data applicable to each chamber, including the maximum differential pressure for the common elements, when this pressure is less than the higher pressure in the adjacent chambers.

RS-101.2 Marking Each Independent Chamber. The complete required marking may be applied to each independent pressure chamber, provided additional marking, such as stock space, jacket, tubes, or channel box, is used to indicate clearly to which chamber the data applies.

RS-110 APPLICATION OF STAMP[23] TO VESSEL

The Fabricator who completes the fabrication of the vessel, or vessel parts, shall have a valid Certificate of Authorization for the use of the Certification Mark with RP Designator. Except when the nameplate is to be molded in, the Certification Mark shall be applied by the Manufacturer only with the acceptance of the Inspector after the hydrostatic or pneumatic leakage test for Class I or Class III vessels and the acoustic emission Acceptance Test for Class II vessels has been satisfactorily made and any other required inspection and testing have been satisfactorily completed. Such application of the Certification Mark together with final certification in accordance with the rules of this Section shall confirm that all applicable requirements of this Section have been fulfilled.

Copyright ASME International (BPVC)

Figure RS-132.1
Form of Stamping and Marking

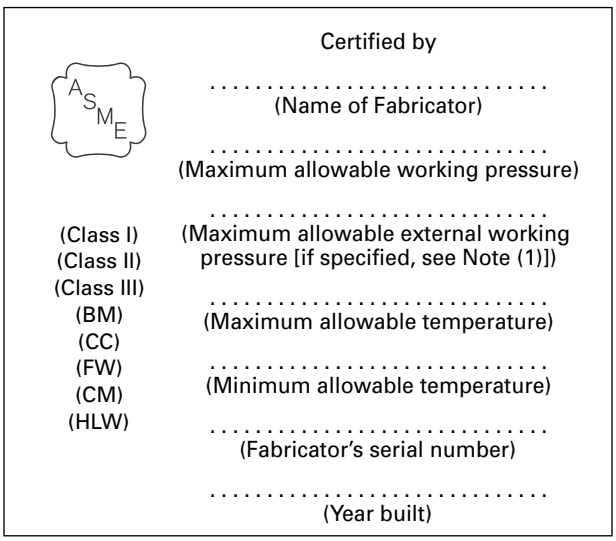

NOTE: The maximum allowable external working pressure is required only when specified as a design condition.

RS-120 PART MARKING

Parts of pressure vessels for which Partial Data Reports are required in RS-301 shall be marked as specified in RS-100 by the parts' fabricator and, in addition, the word PART shall be applied under the Certification Mark. In lieu of this marking of parts, other means of identification may be used. Such substitute markings shall be clearly described in the parts' fabricator's Quality Control Manual that has been accepted by ASME and the marking shall remain legible until the part has been incorporated into the finished vessel. This requirement does not apply to such items as handhole covers, manhole covers, and accessories.

RS-130 NAMEPLATE

The markings required in RS-100 shall be applied to a separate nameplate permanently attached to the vessel by suitable means. The marking shall not be stamped directly on the vessel.

RS-131 STAMPING AND ATTACHMENT OF NAMEPLATES OR MOLDED-IN PRINTED LABELS

(a) The Certification Mark and the Manufacturer's serial number shall be stamped on the nameplate with "low stress" stamps, but the other required data may be stamped, etched, cast, or impressed thereon. Alternatively, the other data may be printed or engraved on a suitable material and then be molded as an integral part of the vessel to serve as a nameplate. The arrangement of the data shall be substantially as shown in Figure RS-132.1.

NOTE: The maximum allowable pressure shall be equal to or less than the design pressure. The maximum allowable temperature shall be equal to or less than the maximum design temperature. The minimum allowable temperature shall be equal to or greater than the minimum design temperature.

(b) The required data on a nameplate or a molded-in printed or engraved label shall be in characters not less than $^{5}/_{16}$ in. (8 mm) high.

(c) Required nameplates shall be permanently attached to the vessel, or a bracket permanently attached to the vessel, in some conspicuous place, either by use of a surface mat or by molding in as an integral part of the vessel or by some other suitable means. If the nameplate is molded in, it shall be done in a manner that will permit the required marking to be visible on the finished vessel, and the procedure for controlling such nameplates prior to molding them into the vessel shall be clearly described in the Fabricator's Quality Control System.

(d) The Fabricator shall ensure that the nameplate with the correct marking has been applied to the proper vessel, and the Inspector shall verify that this has been done.

(e) Vessels intended for use with potable water as described in RG-113 (Section IV application) shall bear the letters HLW.

RS-132 STAMPING AND MARKING OF NAMEPLATES

The stamping and marking shall be arranged as shown in Figure RS-132.1.

Copyright ASME International (BPVC)

ARTICLE RS-2
USE OF CERTIFICATION MARK STAMP

RS-200 CERTIFICATION MARK STAMP BEARING OFFICIAL MARK

Authorization to use the stamp bearing the official Certification Mark shown in Figure RS-100.1 will be granted by ASME pursuant to the provisions of ASME CA-1, Conformity Assessment Requirements.

RS-201 APPLICATION FOR CERTIFICATION MARK STAMP

Application for the Certification Mark stamp shall be in accordance with ASME CA-1, Conformity Assessment Requirements.

RS-202 AUTHORIZATION TO USE CERTIFICATION MARK STAMP

Authorization to use the Certification Mark stamp may be granted, renewed, suspended, or withheld by ASME in accordance with ASME CA-1, Conformity Assessment Requirements.

RS-203 REGULATIONS CONCERNING ISSUANCE AND USE OF STAMPS

ASME may at any time make regulations concerning the issuance and use of Certification Marks as it deems appropriate, and all such regulations become binding upon the holders of any valid Certificates of Authorization. The regulation and use of stamps shall be in accordance with ASME CA-1, Conformity Assessment Requirements.

RS-204 OBTAINING STAMPS

All stamps for applying the Certification Mark shall be obtained from ASME.

Copyright ASME International (BPVC)

ARTICLE RS-3
REPORT FORMS

RS-300 FABRICATOR'S DATA REPORTS

A Fabricator's Data Report shall be filled out on Form RP-1 or Form RP-3, as applicable (sample forms are included at the end of this Section), by the Fabricator and shall be signed by the Fabricator and the Authorized Inspector for each pressure vessel.

Same-day production of vessels may be reported on Form RP-1 or Form RP-3, provided all of the following requirements are met:

(a) Vessels shall be identical in design and manufacture.

(b) Vessels shall be manufactured for stock or for the same user or his designated agent.

(c) Serial numbers shall be in uninterrupted sequence.

(d) The Fabricator's written Quality Control System shall include procedures to control the development, distribution, and retention of the data reports.

RS-301 PARTIAL DATA REPORTS

(a) Partial Data Reports for those parts of a pressure vessel requiring inspection under this Section, which are furnished by other than the shop of the Fabricator responsible for the completed vessel, shall be executed by the parts' Fabricator and the Inspector in the parts' Fabricator's shop, in accordance with the requirements of this Section, and shall be forwarded, in duplicate, to the Fabricator of the finished vessel. These Partial Data Reports, together with the Inspector's own inspection, shall constitute the requirements for the Inspector to authorize and witness the application of a Certification Mark to the finished vessel (see RS-110). When Form RP-2 or Form RP-4 is used, it shall be attached to the associated Form RP-1 or Form RP-3 by the Fabricator of the vessel to be marked with the Certification Mark.

(b) Data Reports for those parts of a pressure vessel that are furnished by a parts' Fabricator to the user of an existing Code vessel as replacement or repair parts shall be executed on Form RP-2 or Form RP-4 by the parts' Fabricator and his Inspector in accordance with the requirements of this Section. A copy of the parts' Fabricator's Partial Data Report shall be furnished to the user or his designated agent and maintained in accordance with RS-302.

(c) The parts' Fabricator shall indicate under "Remarks" the extent he has performed any or all of the design functions. When the parts' Fabricator performs only a portion of the design, he shall state which portions of the design he performed.

(d) Same day production of vessel parts may be reported on a single Form RP-2 or Form RP-4, provided all of the following are met:

(1) Vessel parts shall be identical.

(2) Fabricator's serial numbers shall be in uninterrupted sequence.

(3) The Fabricator's written Quality Control System shall include procedures to control the development, distribution, and retention of the Partial Data Reports.

(e) For guidance in preparing Partial Data Reports, see Nonmandatory Appendix AI.

Sample Data Report Form RP-2 and Form RP-4 are included at the end of this Section.

RS-302 RETENTION OF DATA REPORTS

The Fabricator shall either keep a copy of the Data Report on file for at least 5 yr for Class I vessels and 10 yr for Class II vessels, or register the vessel with the National Board of Boiler and Pressure Vessel Inspectors, 1055 Crupper Avenue, Columbus, Ohio 43229. A copy of the Data Report shall be sent to the User, Inspector, and jurisdiction upon request.

Copyright ASME International (BPVC)

MANDATORY APPENDIX 1
QUALITY CONTROL SYSTEM

(19) 1-100 GENERAL

The Fabricator shall have and maintain a Quality Control System which will establish that all Code requirements, including material, design, fabrication, examination by the Fabricator, and inspection (by the Inspector), will be met. The System may include provisions for satisfying any requirements by the Fabricator or User which exceed minimum Code requirements and may include provisions for quality control of non-Code work. In such systems, the Fabricator may make changes in parts of the system which do not affect the Code requirements without securing acceptance by the Inspector. Before implementation, revisions to Quality Control Systems shall have been found acceptable to the Authorized Inspector if such revisions affect Code requirements.

The system that the Fabricator uses to meet the requirements of this Section shall be suitable for his own circumstances. The necessary scope and detail of the system shall depend on the complexity of the work performed and on the size and complexity of the Fabricator's or Assembler's organization. A written description of the system the Fabricator will use to produce a Code item shall be available for review.

The written description may contain information of a proprietary nature relating to the Fabricator's processes. Therefore, the Code does not require any distribution of this information except for the Authorized Inspector and ASME Designee as covered by 1-110(l). It is intended that information learned about the system in connection with the evaluation shall be treated as confidential and that all loaned descriptions shall be returned to the Fabricator upon completion of the evaluation.

1-110 OUTLINE OF SOME OF THE FEATURES TO BE INCLUDED IN THE QUALITY CONTROL SYSTEM

(a) Authority and Responsibility. The authority and responsibility of those in charge of the Quality Control System shall be clearly established. Persons performing quality control functions shall have sufficient and well-defined responsibility, the authority and the organizational freedom to identify quality control problems and to initiate, recommend, and provide solutions.

(b) Organization. An organization chart shall be included, showing the relationship between engineering, quality control, purchasing, production, testing, inspection, and management.

(c) Drawings, Design Calculations, and Specifications. The Quality Control System shall include procedures that will ensure that the latest applicable drawings, design calculations, specifications, and instructions required by this Section as well as authorized changes are used for fabrication, inspection, and testing. For Class II and Class III vessels, the system shall also include reference to the design documents prepared and certified by a Professional Engineer, and shall also ensure that all changes to such documents are approved by a Professional Engineer.

(d) Production Flow and In-Plant Inspection and Check-Off. A basic production flow procedure, including in-plant inspection and check-off points and a means of recording them, shall be included. These steps shall also ensure that the Procedure Specifications specified on the drawings are used for fabrication.

(e) Material Receiving Control and Identity. Prior to and during fabrication operations, a system of material control shall be maintained to ensure that material used complies with the applicable specification.

(f) Nonconforming Material and Repairs. All nonconforming material and components (including fabrication errors) shall be identified and recorded. Components that fail to meet the required standards may be repaired if the proposed repair is approved by the Design Engineer and accepted by the Inspector prior to beginning the repair. The system shall describe the location of the repair and how the repair is controlled to meet Code requirements, or the item shall be rejected.

(g) Resin Control. The system shall describe the control of

(1) specification and mixing procedures;

(2) storage, issuance, handling, and disposal of resins, catalysts, fillers, and pigments;

(3) method used to maintain identification of resins during fabrication.

(h) Assembly, Fit-Up, and Dimensions Control. The system shall describe the control of

(1) assembly and fit-up of the pressure vessel and vessel parts to ensure compliance with fabrication drawings;

Copyright ASME International (BPVC)

(2) adhesive bonding and secondary lay-up of components to ensure compliance with fabrication drawings;

(3) dimensional checks as specified by the Code and to ensure compliance with fabrication drawings.

(i) Calibration of Measurement and Test Equipment. Establish and maintain a system for the calibration of all examination, measuring, and test equipment used in fulfillment of Code requirements. A written description of this system shall be maintained and made available to the Inspector upon request.

(j) Forms. Appropriate forms shall be included and cross-referenced with the items of this Appendix as applicable:

(1) process or traveler's sheets;

(2) in-plant inspection and check-off forms;

(3) procedures and performance qualification forms;

(4) Data Report Forms;

(5) Other appropriate forms.

(k) Self-Auditing. Management shall regularly review the status and adequacy of the Quality Control System.

(l) Authorized Inspector. The Quality Control System shall include reference to the Authorized Inspector as defined in RI-110. The Fabricator shall make available to the Inspector a copy of the written Quality Control System, and also all design documents and all other data necessary for the Inspector to perform his duties in accordance with this Section.

(m) Nondestructive Examination. The system shall describe all nondestructive examinations and the procedures to be used by the Fabricator to fulfill the requirements of this Section.

(n) Records Retention. The Fabricator shall have a system for the maintenance of Data Reports and other records as required by this Section.

(o) Sample Forms. The forms used in the Quality Control System and any detailed descriptions of their use shall be available for review. The written description shall make necessary reference to such forms.

Copyright ASME International (BPVC)

MANDATORY APPENDIX 2
CAPACITY CONVERSIONS FOR SAFETY VALVES

2-100 REQUIREMENTS FOR CAPACITY CONVERSIONS

(a) The capacity of a safety or relief valve in terms of a gas or vapor other than the medium for which the valve was officially rated may be determined by application of the following equations.[24]

For steam:

$$W_s = C_N KAP$$

where

C_N = 51.5 for calculations of U.S. Customary units
= 5.25 for SI units calculations, P (MPa)

For air:

$$W_a = CKAP\sqrt{M/T}$$

where

C = 356 for U.S. Customary units calculations
= 27.03 for SI units calculations
M = 28.97 mol. wt. for both U.S Customary and SI units calculations
T = 520 when W_a is the rated capacity for U.S. Customary units calculations
= 288 when W_a is the rated capacity for SI units calculations

For any gas or vapor:

$$W = CKAP\sqrt{M/T}$$

where

A = actual discharge area of the safety valve, in.^{2} (mm^2)
C = constant for gas or vapor which is a function of the ratio of specific heats $k = c_p/c_v$ [see Figure 2-100.1 (Figure 2-100.1M)]
K = coefficient of discharge (see RR-112)
M = molecular weight
P = (set pressure × 1.10) plus atmospheric pressure, psia [MPA (absolute)]
T = absolute temperature at inlet, °F plus 460 (K)
W = flow of any gas or vapor, lb/hr (kg/h)
W_a = rated capacity, converted to lb of air/hr at 60°F (20°C), inlet temperature
W_s = rated capacity, lb of steam/hr

These equations may also be used when the required flow of any gas or vapor is known and it is necessary to compute the rated capacity of steam or air.

(b) Molecular weights of some of the common gases and vapors are given in Table 2-100.1.

(c) For hydrocarbon vapors, where the actual value of k is not known, the conservative value k = 1.001 has been commonly used and the equation becomes:

$$W = CKAP\sqrt{M/T}$$

where

C = 315 for U.S. Customary units calculations
= 23.95 for SI units calculations

(d) When desired, as in the case of light hydrocarbons, the compressibility factor Z may be included in the equations for gases and vapors as follows:

$$W = CKAP\sqrt{M/ZT}$$

Example 1:

Given: A safety valve bears a certified capacity rating of 3,020 lb of steam/hr for a pressure setting of 200 psi.

Problem: What is the relieving capacity of that valve in terms of air at 100°F for the same pressure setting?

Solution:

For steam:

$$W_s = 51.5KAP$$

$$3{,}020 = 51.5\,KAP$$

$$KAP = \frac{3020}{51.5} = 58.5$$

For air:

$$\begin{aligned} W_a &= CKAP\sqrt{M/T} \\ &= 356KAP\sqrt{28.97/(460 + 100)} \\ &= (356)(58.5)\sqrt{28.97/560} \\ &= 4{,}750\,\text{lb/hr} \end{aligned}$$

Copyright ASME International (BPVC)

Figure 2-100.1
Constant *C* for Gas or Vapor Related to Ratio of Specific Heats
($k = c_p/c_v$)

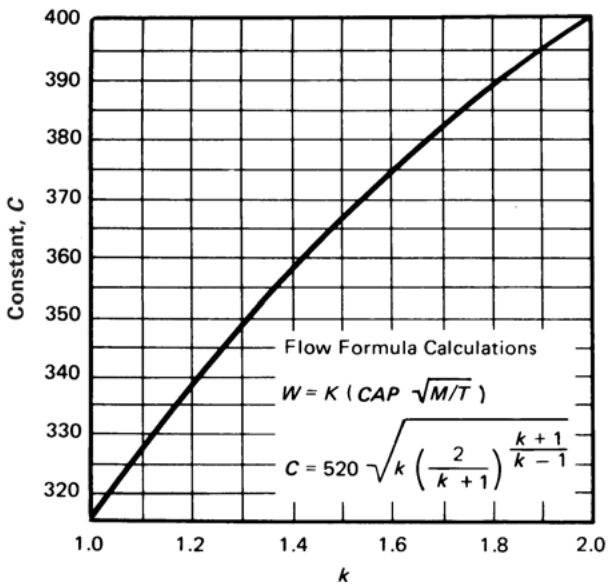

k	Constant, C	k	Constant, C	k	Constant, C
1.00	315	1.26	343	1.52	366
1.02	318	1.28	345	1.54	368
1.04	320	1.30	347	1.56	369
1.06	322	1.32	349	1.58	371
1.08	324	1.34	351	1.60	372
1.10	327	1.36	352	1.62	374
1.12	329	1.38	354	1.64	376
1.14	331	1.40	356	1.66	377
1.16	333	1.42	358	1.68	379
1.18	335	1.44	359	1.70	380
1.20	337	1.46	361	2.00	400
1.22	339	1.48	363	2.20	412
1.24	341	1.50	364	. . .	. . .

Figure 2-100.1M
Constant *C* for Gas or Vapor Related to Ratio of Specific Heats
($k = c_p/c_v$)

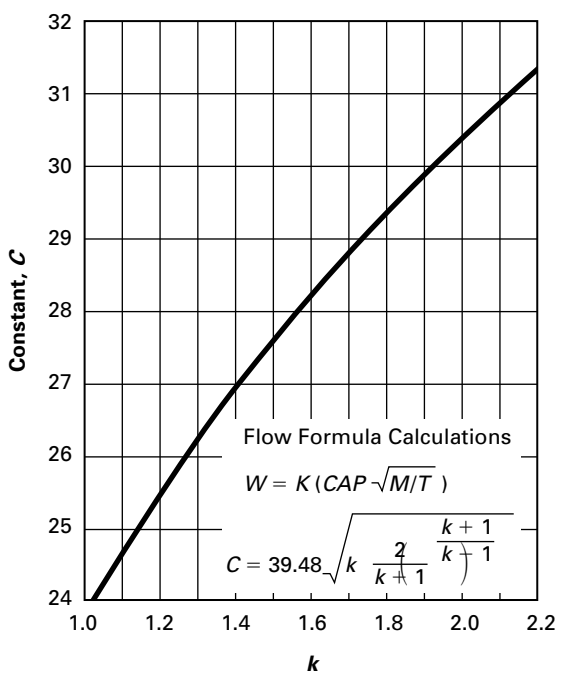

k	Constant, C	k	Constant, C	k	Constant, C
1.001	23.95	1.26	26.05	1.52	27.80
1.02	24.12	1.28	26.20	1.54	27.93
1.04	24.30	1.30	26.34	1.56	28.05
1.06	24.47	1.32	26.49	1.58	28.17
1.08	24.64	1.34	26.63	1.60	28.29
1.10	24.81	1.36	26.76	1.62	28.40
1.12	24.97	1.38	26.90	1.64	28.52
1.14	25.13	1.40	27.03	1.66	28.63
1.16	25.29	1.42	27.17	1.68	28.74
1.18	25.45	1.44	27.30	1.70	28.86
1.20	25.60	1.46	27.43	2.00	30.39
1.22	25.76	1.48	27.55	2.20	31.29
1.24	25.91	1.50	27.68	. . .	. . .

Copyright ASME International (BPVC)

Table 2-100.1
Molecular Weights of Gases and Vapors

Air	28.98	Refrigerant 22	86.48
Acetylene	26.04	Refrigerant 114	170.90
Ammonia	17.03	Hydrogen	2.02
Butane	58.12	Hydrogen sulfide	34.08
Carbon Dioxide	44.01	Methane	16.04
Chlorine	70.91	Methyl chloride	50.48
Ethane	30.07	Nitrogen	28.02
Ethylene	28.05	Oxygen	32.00
Refrigerant 11	137.371	Propane	44.09
Refrigerant 12	120.9	Sulfur dioxide	64.06

Example 2:

Given: It is required to relieve 5,000 lb of propane/hr from a pressure vessel through a safety valve set to relieve at a pressure of P_s, psi, and with an inlet temperature of 125°F.

Problem: What total capacity in lb of steam/hr in safety valves must be furnished?

Solution:

For propane:

$$W = CKAP\sqrt{M/T}$$

Value of C is not definitely known. Use the conservative value C = 315:

$$5{,}000 = 315KAP\sqrt{44.09/(460 + 25)}$$

$$KAP = 57.7$$

For steam:

$$W_s = 51.5KAP = (51.5)(57.7)$$
$$= 2{,}790 \text{ lb / hr set to relieve at } P_s, \text{ psi}$$

Example 3:

Given: It is required to relieve 1,000 lb of ammonia/hr from a pressure vessel at 150°F.

Problem: What is the required total capacity in lb of steam/hr at the same pressure setting?

Solution:

For ammonia:

$$W = CKAP\sqrt{M/T}$$

Manufacturer and User agree to use k = 1.33. From Figure 2-100.1, C = 350:

$$1{,}000 = 350KAP\sqrt{17.03/(460 + 150)}$$

$$KAP = 17.10$$

For steam:

$$W_s = 51.5KAP = (51.5)(17.10)$$
$$= 880 \text{ lb/hr}$$

Example 4:

Given: A safety valve bearing a certified rating of 10,000 ft^3/min of air at 60°F and 14.7 psia (atmospheric pressure).

Problem: What is the flow capacity of this safety valve in lb of saturated steam/hr for the same pressure setting?

Solution:

For air, weight of dry air at 60°F and 14.7 psia is 0.0766 lb/ft^3:

$$W_a = (10{,}000)(0.0766)(60) = 45{,}960 \text{ lb/hr}$$

$$45{,}960 = 356KAP\sqrt{28.97/(460 + 60)}$$

$$KAP = 546$$

For steam:

$$W_s = 51.5KAP = (51.5)(546)$$
$$= 28{,}200 \text{ lb/hr}$$

Copyright ASME International (BPVC)

MANDATORY APPENDIX 4
GLOSSARY OF TERMS RELATED TO FIBER-REINFORCED PLASTICS

(19)

accelerator: a material which, when mixed with a resin and curing agent, will speed up the chemical reaction between the resin and curing agent.

adhesive: substance capable of holding two surfaces together.

ambient conditions: prevailing environmental conditions, such as the surrounding temperature, pressure, and relative humidity.

angle ply laminate: possessing equal plies with positive and negative angles. This bidirectional laminate is orthotropic. Typical examples of an angle ply laminate would be cross-ply [$^{0}/_{90}$] or [±45].

anisotropy: material properties that vary with the orientation or direction of the reference coordinates. Having different material properties in all directions.

aramid fiber: an aromatic polyamide fiber.

A-stage: an early stage in the reaction of certain thermosetting resins, in which the material is still soluble in certain liquids and fusible.

ASTM ring: a parallel filament wound test ring made to the requirements of ASTM D2291.

axial winding: in filament-wound composites, a winding with the filaments parallel to the longitudinal axis (0 deg helix angle).

balanced design: in filament-wound reinforced plastics, a winding pattern designed to have equal stresses in all filaments.

balanced-in-plane contour: in a filament-wound part, a head contour in which the filaments are oriented within a plane and the radii of curvature are adjusted to balance the stresses along the filaments with the pressure loading.

balanced laminate: where plies with positive angles are balanced by equal plies with negative angles. A balanced laminate is orthotropic in in-plane behavior but may be anisotropic in flexural behavior.

band density: in filament winding, the quantity of fiber reinforcement per inch of bandwidth, expressed as strands (or filaments) per inch.

band thickness: in filament winding, the thickness of the reinforcement as it is applied to the mandrel.

bandwidth: in filament winding, the width of the reinforcement as it is applied to the mandrel.

batch: a quantity of material produced in a single, separate production run which is identifiable by a unique number.

biaxial load: a loading condition whereby a laminate is stressed in at least two different directions in the plane of the laminate. The loading condition of a pressure vessel under internal pressure and with unrestrained ends.

biaxial winding: a type of winding in which the helical band is laid in sequence, side by side, eliminating crossover of the fibers.

bidirectional laminate: a reinforced plastic laminate with the fibers oriented in various directions in the plane of the laminate (see also *unidirectional laminate*).

bladder: a flexible liner with independent burst strength not greater than 10% of the vessel design pressure, temporarily installed in a fiber-reinforced pressure vessel prototype in order to prevent leakage through the wall (to facilitate attainment of the required qualification pressure).

bleedout: in filament-wound composites, the excess liquid resin that migrates to the surface of a winding.

B-stage: an intermediate stage in the reaction of certain thermosetting resins in which the material swells when in contact with certain liquids and softens when heated, but may not entirely dissolve or fuse. The resin in an uncured prepreg or premix is usually in this stage.

bulk molding compound: a blend of resin and chopped fibers used for compression and injection molding.

carbon filament: made from organic precursor filament using a process of high temperature and mechanical stretching in an oxygen-free environment.

catalyst: see *initiator*.

catenary: the tendency of some strands in a taut horizontal roving to sag lower than the others; a measure of the evenness of length (of winding tension indirectly) of strands in a specified length of roving. The distance between the

Copyright ASME International (BPVC)

strands at the midpoint of a roving draped in a catenary in a specified manner (see also *strand length differential*).

circs: see *circumferential winding*.

circuit: one complete traverse of the fiber feed mechanism of a winding machine; in filament-wound, fiber-reinforced plastics, one complete traverse of a winding band from one arbitrary point along the winding path to another point on a plane through the starting point and perpendicular to the axis.

circumferential (circs) winding: in filament-wound composites, a winding with the filaments essentially perpendicular to the axis (90 deg or level winding).

compatibility: usually refers to the suitability of a sizing or finish for use with certain general resin types (e.g., polyester compatible roving, epoxy compatible roving, etc.).

compliance: measurement of softness as opposed to stiffness of a material. It is a reciprocal of the Young's modulus, or an inverse of the stiffness matrix.

composite: material that is made of two or more constituent materials.

constituent materials: individual materials that make up the composite material, such as glass fibers and epoxy.

contact molding: a process for molding reinforced plastics in which reinforcement and resin are placed on a mold; cure is either at room temperature using a catalyst–promoter system or by heat in an oven, and no additional pressure is used.

coupling agent: in fibers for composites, the part of the surface treatment or finish which is designed to provide a bonding link between the surface and the laminating resin.

crazing: in a composite, the appearance of fine cracks in the resin, usually as a result of excessive resin shrinkage or some external loading condition.

creel: an apparatus for holding a number of packages of strand, yarn, roving, tape, etc. Tensioning devices are sometimes included in the creel.

creep: the special case of inelasticity that relates to the stress-induced time-dependent deformation under load. Small time-dependent deformations may occur after the removal of all applied loads.

critical buckling stress: least value of stress that will cause buckling.

cross-ply laminate: special laminate that contains only 0 deg and 90 deg plies.

C-stage: the final stage in the reaction of certain thermosetting resins in which the material is relatively insoluble and infusible. The resin in a fully cured thermoset molding is in this stage.

cure: to change the properties of a plastic by chemical reaction, which may be condensation, polymerization, or addition; usually accomplished by the action of heat or catalyst or both, with or without pressure.

curing agent: substance mixed with resin, generally with the addition of heat, that will chemically combine to form a polymer by cross-linking.

deformation: alteration of shape or size of a component part.

delamination: the physical separation or loss of bond between laminate plies.

displacement angle: in filament winding, the advancement distance of the winding ribbon on the equator after one complete circuit.

doubler: in a filament-wound part, a local area with extra-wound reinforcement, wound integrally with the part, or wound separately and fastened to the part.

dry laminate: a laminate containing insufficient resin for complete bonding of the reinforcement.

dry spot: in a laminate, an area containing insufficient resin for complete bonding of the reinforcement.

dry winding: filament winding with dry strands of fiber; often used to confirm the winding pattern.

dwell: in filament winding, the time that the traverse mechanism is stationary while the mandrel continues to rotate to the appropriate point for the traverse to begin a new pass.

E-CR glass: an E-glass material formulated such that it has improved corrosion resistance, particularly to acids.

E-glass: a borosilicate glass; the type most used for glass fibers for reinforced plastics. Suitable for electrical laminates because of its high resistivity.

engineering constants: typical constants are the effective Young's modulus, Poisson's ratio, and shear modulus. Each constant is accompanied by letter or numerical subscripts designating the direction associated with the property. These are measured directly from uniaxial tensile, compressive, and pure shear test applied to unidirectional as well as laminated composites.

epoxy: synthetic resin containing a reactive group in which an oxygen atom is joined to each of two carbon atoms which are already united in some other way (see sketch below).

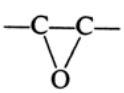

equator: in a filament-wound pressure vessel, the line described by the juncture of the cylindrical portion and the end dome.

expansion stresses: stresses resulting from restraint of free expansion and displacement of the piping system.

Copyright ASME International (BPVC)

external pressure: a condition where the absolute pressure inside the vessel is less than the absolute pressure on the outside of the vessel.

fabric: a planar structure produced by interlacing yarns, rovings, etc.

fiber: single filament, rolled or formed in one direction, and used as the principal constituent of woven and nonwoven composite materials. Most common fibers are glass and carbon.

fiber content: percent by volume, or percent by weights, of the fiber component in a composite material. See also *loss-on-ignition*.

fiber stress: in a filament-wound part, usually a pressure vessel, the stress calculated using the load and the cross-sectional area of the reinforcement only.

filament winding: a process for fabricating a composite structure in which continuous reinforcements (filament, tape, or other), either previously impregnated with a matrix material or impregnated during winding, are placed over a rotating and removable form or mandrel in a previously prescribed way to meet certain stress conditions. Generally, the shape is a surface of revolution and may or may not include end closures.

filler: a relatively inert nonfibrous material added to a plastic to modify its strength, permanence, working properties, or other qualities, or to lower costs.

finish: a material applied to the surface of fibers used to reinforce plastics and intended to improve the physical properties of such reinforced plastics over that obtained using glass reinforcement without finish (see *surface treatment*).

free end displacement: the relative motions that would occur between an attachment and connected structure or equipment if the two members were separated. Examples of such motions are those that would occur because of relative thermal expansion of piping, equipment, and equipment supports, or because of rotations imposed upon the equipment by sources other than piping.

fuzz: accumulation of short broken filaments after passing fiber strands, yarns, or rovings over a contact point. Often weighted and used as an inverse measure of abrasion resistance.

gap: in filament winding, the space between successive windings, where windings are usually intended to lie next to each other.

gel: the initial jellylike solid phase that develops during the cure of a thermosetting resin.

gel coat: a resin applied to the surface of a mold and gelled prior to lay-up. The gel coat becomes an integral part of the finished laminate and is usually used to improve surface appearance, etc.

gel time: time lapsed as read on the actual exotherm curve between 150°F and 10°F above the 180°F bath temperature (190°F). This definition applies for any desired reference (bath) temperature.

geodesic: the shortest distance between two points on a surface.

geodesic isotensoid: see *geodesic ovaloid*. Isotensoid refers to constant stress level in any given filament at all points in its path.

geodesic isotensoid contour: in filament-wound, fiber-reinforced plastic pressure vessels, a dome contour with controlled and varying meridional and hoop curvatures such that filaments placed on geodesic paths will exhibit uniform tensions, balanced so that the resolved loads lie in the fiber directions, throughout their length under pressure loading.

geodesic line: the shortest distance between two points on a surface of revolution.

geodesic ovaloid: a contour for end domes, the fibers forming a *geodesic line*. The forces exerted by the filaments are proportioned to match the hoop and meridional stresses at any point.

geodesic ovaloid contour: see *geodesic isotensoid contour*.

glass fiber: a glass filament that has been cut to a measurable length. Staple fibers of relatively short length and suitable for spinning into yarn.

glass filament: a form of glass that has been drawn to a small diameter and extreme length.

graphite filament: made from carbon filament and processed to a higher temperature, to a point where the material is transformed into graphite, a crystalline allotrope of carbon.

gross structural discontinuity: a source of stress or strain intensification which effects a relatively large portion of a structure and has a significant effect on the overall stress or strain pattern or on the structure as a whole (e.g., head-to-shell and flange-to-shell junctions, nozzles, and junctions between shells of different diameters or thicknesses).

hand lay-up: the process of placing and working successive plies of the reinforcing material or resin-impregnated reinforcement in position on a mold by hand. See also *contact molding*.

hardener: see *curing agent*.

head: the end closure(s) of a cylindrical container.

helical winding: in filament-wound composites, a winding in which a filament band advances along a helical path, not necessarily at a constant angle, except in the case of a cylinder.

high pressure molding: a molding process in which the pressure used is greater than 200 psi.

Copyright ASME International (BPVC)

hoop winding: see *circumferential winding*.

hybrid: composite with more than two constituents (i.e., epoxy resin with two or more fibers), such as a carbon/glass/epoxy composite hybrid.

impregnate: in fiber-reinforced plastics, saturation of the reinforcement with a resin.

inelasticity: a general characteristic of material behavior in which material does not return to its original (undeformed) shape and size after removal of all applied loads.

inhibitor: a material added to a resin/hardener mixture to slow down cure at approximately room temperature. Usually used in prepreg or premix resins.

initiator: a material which, when mixed with a resin, will react chemically with the resin to produce a cured thermoset.

interface: on fibers, the contact area between fiber and surface treatment (or finish). In a laminate, the contact area between the fiber surface treatment, or finish, and the laminating resin.

interlaminar shear strength: the maximum shear stress existing between layers of a laminated material.

interlaminar stresses: the three stress components associated with the thickness direction of a plate. Interlaminar stresses are significant if the thickness is greater than 10% of the length or width of the plate. These stresses can also be significant in areas of concentrated loads and abrupt change in material and geometry. The effects of these stresses are difficult to assess because three-dimensional stress analysis and the failure criterion are not well understood.

invariant: constant values for all orientations of the coordinate axis. Components of stress, strain, stiffness, and compliance all have linear and quadratic invariants. For composite materials they represent directionally independent properties, and the bounds of stiffness and strength of multidirectional laminates.

isotensoid: constant tension.

isotropic laminate: a laminate in which the strength properties are equal in the in-plane directions (see quasi-isotropic).

knitted matrix fabric: a structure produced by inserting reinforcing fibers into a knitted matrix. The matrix fibers are non-reinforcing and serve only to hold the reinforcing fibers in place.

knuckle area: the area in an end dome region near the juncture with the cylindrical portion; in a filament-wound part, the area of transition between different general shapes, e.g., the transition from a central cylindrical portion to the end dome.

lamina: ply or layer of unidirectional composite or fabric.

laminate: a product made by bonding together two or more layers of material or materials.

laminate ply: one layer of a product made by bonding together two or more layers of material.

lamination theory: the most common method for the analysis and design of composite laminates; each ply or ply group is treated as a quasi-homogeneous material. Linear strain across the thickness is assumed.

lap: in filament winding, the amount of overlay between successive windings, usually intended to minimize gapping.

lay: in filament winding, the orientation of the ribbon with some reference, usually the axis of rotation.

lay-up: see below

(a) a laminate that has been assembled, but not cured

(b) a description of the component materials, geometry, etc., of a laminate

level winding: see *circumferential winding*.

liner: in a pressure vessel, an inner protective barrier of metallic, elastomeric, thermoset or thermoplastic materials to protect the laminate from corrosive chemical attack or prevent leakage under stress.

load stress: the stress resulting from the application of a load, such as internal pressure or the effects of gravity, as distinguished from thermal stress.

local primary membrane stress: a membrane stress produced by pressure or other mechanical loading and associated with a primary and/or a discontinuity effect which would, if not limited, produce excessive distortion in the transfer of load to other portions of the structure. Conservatism requires that such a stress be classified as a local primary membrane stress even though it has some characteristics of a secondary stress. An example of a local primary membrane stress is the membrane stress in a shell produced by external load and moment at a permanent support or at a nozzle connection.

local structural discontinuity: a source of stress or strain intensification which affects a relatively small volume of material and does not have a significant effect on the overall stress or strain pattern or on the structure as a whole (e.g., small fillet radii and small attachments).

longitudinal modulus: elastic constant along the fiber direction in a unidirectional composite, such as longitudinal Young's modulus.

longos: low-angle helical or longitudinal windings.

loops and snarls: a place in a roving where one or more short lengths of strand have doubled back on themselves.

loop order: the number of individual circuits required for a winding path to begin repeating by laying down immediately adjacent to the initial circuit.

Copyright ASME International (BPVC)

loss-on-ignition: weight loss, usually expressed in percent of total, after burning off an organic surface treatment from fibers or an organic resin from a fiber laminate.

low-pressure molding: molding or laminating in which the pressure used is between 15 psi and 200 psi.

mandrel: in filament winding, the mold on which the laminating material is wound.

mat: a fiber material for composite laminates consisting of randomly oriented chopped strands or swirled strands with a binder and available in blankets of various widths and lengths.

mat binder: a resin which is applied to fiber strands and cured during the manufacture of a mat to hold strands in place and maintain the shape of the mat.

matrix: see *resin*.

matrix: mathematical entity, consisting of rows and columns of numbers. In two dimensions, stress and strain are 1 × 3 matrices, and stiffness and compliance are 3 × 3 matrices.

matrix inversion: algebraic operation to obtain compliance matrix from stiffness matrix, or vice versa. It is analogous to obtaining the reciprocal of a number.

membrane stress: the component of normal stress which is uniformly distributed and equal to the average value of stress across the thickness of the section under consideration.

midplane: middle surface of a laminate thickness; usually the $z = 0$ plane.

modulus: elastic constants such as the Young's modulus or shear modulus.

moment: stress couple that causes a plate or beam to bend or twist.

multicircuit winding: in filament-wound composites, a winding that requires more than one circuit before the band repeats by laying adjacent to the first band.

multidirectional: having multiple ply orientations in a laminate.

netting analysis: the analysis of filament-wound structures which assumes that the stresses induced in the structure are carried entirely by the filaments, and the strength of the resin is not taken into account. Also, the filaments possess no bending or shearing stiffness and carry only axial loads.

NOL ring: a parallel filament-wound test specimen used for measuring various mechanical strength properties of the material by testing the entire ring, or segments of it. The ring is usually 5.750 in. (146 mm) in inside diameter by 0.250 in. (6 mm) wide by either 0.060 in. (1.52 mm) or 0.125 in. (3.18 mm) in wall thickness.

normal stress: the component of stress normal to the plane of reference (this is also referred to as *direct stress*). Usually the distribution of normal stress is not uniform through the thickness of a part, so this stress is considered to be made up in turn of two components, one of which is uniformly distributed and equal to the average value of stress across the thickness of the section under consideration, and the other of which varies with the location across the thickness.

off-axis: not coincident with the symmetry axis; also called *off-angle*.

orthotropy: having three mutually perpendicular planes of symmetry. Unidirectional plies, fabric, cross-ply, and angle-ply laminates are all orthotropic.

ovaloid: a surface of revolution symmetrical about the polar axis which forms the end closure for a filament-wound cylinder (e.g., an elliptical head closure).

part: a portion of a vessel that is fabricated by an operation or process requiring inspection by the Inspector.

peak stress: a stress that may or may not be highly localized and does not cause noticeable distortions. Examples of peak stress are:

(a) the thermal stress in the wall of a vessel or pipe caused by a rapid change in temperature of the contained fluid;

(b) the stress at a local structural discontinuity.

phenolic: synthetic condensation resins of aldehyde and phenols. The common reactants are formaldehyde, phenol, and cresol.

planar winding: a winding in which the filament path on each dome lies on a plane that intersects the dome, while a helical path over the cylindrical section is connected to the dome paths.

plasticizer: a material added to a resin to facilitate compounding and improve flexibility and other properties of the finished product.

plied yarn: a yarn formed by twisting together two or more single yarns in one operation.

ply group: a group formed by contiguous plies with the same angle.

ply strain: those components in a ply which, by the laminate plate theory, are the same as those in the laminate.

ply stress: those components in a ply which vary from ply to ply depending on the materials and angles in the laminate.

polar piece: in a pressure vessel, the metal reinforcements placed at both ends of the major axis of the vessel. Their extension into the end dome depends on stress conditions.

Copyright ASME International (BPVC)

polar winding: a winding in which the filament path passes tangent to the polar opening at one end of the chamber, and tangent to the opposite side of the polar opening at the other end. A one-circuit pattern is inherent in the system.

polyester: see below

(a) basically a class of thermosetting resins produced by esterification of polybasic organic acids (or anhydrides) with polyhydric alcohols;

(b) for Code purposes, polyester may be any type of liquid resin which comprises a mixture of polymerizable unsaturated ester and a copolymerizable monomeric substance that contains at least one active ethylene double bond; this liquid resin shall be capable of gelling and curing to infusible polymer by free radical initiation at ordinary temperatures with negligible change in weight;

(c) commonly, the unsaturated ester is a polymer of maleic anhydride, phthalic anhydride, and glycol; the copolymerizable monomer (which also serves as solvent) is styrene, and the free radical initiator is an organic peroxide;

(d) any resin which is handled and cured in a similar manner can be considered acceptable as polyester.

post cure: additional oven cure, usually without pressure, after initial cure to improve final properties of reinforced plastic laminates.

pot life: the length of time a resin system retains a viscosity low enough to be used in laminating.

preform: a matlike structure of chopped fibers bonded together and approximating the shape of the structure.

preform binder: a resin applied to the chopped strands of a preform, usually during its formation, and cured so that the preform will retain its shape and can be handled.

premix: see *bulk molding compound*.

prepreg: in reinforced plastics, the mixture of resin, catalyst, reinforcements, fillers, etc., in web or filamentous form, to provide a complete mix ready for molding.

pressure: unless otherwise defined, means gage pressure.

pressure bag molding: a process for molding reinforced plastics in which a tailored flexible bag is placed over the contact lay-up on the mold, sealed, and clamped in place. Fluid pressure (usually compressed air) is placed against the bag, and the part is cured.

primary stress: a normal stress or a shear stress developed by the imposed loading which is necessary to satisfy the simple laws of equilibrium of external and integral forces and moments. The basic characteristic of a primary stress is that it is not self-limiting. Primary stresses which considerably exceed the stress at onset of cracking will result in failure or, at least, in gross distortion. A thermal stress is not classified as a primary stress. Examples of primary stress are:

(a) general membrane stress in a circular cylindrical or a spherical shell due to internal pressure or to distributed live loads;

(b) bending stress in the central portion of a flat head due to pressure.

principal direction: specific coordinate axes orientation when stress and strain components reach maximum and minimum for the normal components and zero for the shear.

principal stress: the stress component normal to the plane on which the shearing stress is zero.

promoter: see *accelerator*.

quasi-isotropic: laminates exhibit isotropic (that is, independent of direction) in-plane response but are not restricted to isotropic out-of-plane (bending) response. Depending upon the stacking sequence of the individual layers, the laminate may exhibit coupling between in-plane and out-of-plane response.

random pattern: a winding with no fixed pattern. If a large number of circuits is required for the pattern to repeat, a random pattern is approached.

reinforced plastic: see *composite*.

reinforcement: material which is applied to a resin matrix in order to strengthen and improve the properties of the resin.

release agent: material which is applied in a thin film to the surface of a mold to keep the laminating resin from bonding to the mold.

resin: in composites, the material used to bind together the reinforcement material; also known as *matrix*.

resin applicator: in filament winding, the device which deposits the liquid resin onto the reinforcement band.

resin content: the amount of resin in a laminate, expressed as a percent of either total weight or total volume.

resin flexibilizer: see *plasticizer*.

ribbonization: the degree of flattening of a sized roving, expressed as the ratio of ribbon width to thickness.

ribbon width: see *bandwidth*.

ring punchout shear strength: the interlaminar shear strength of a filament-wound cylinder at a predetermined shear plane.

roving: an assemblage of a number of strands or ends, roughly parallel and with very little twist.

roving ball: package, usually cylindrically wound, of continuous roving.

roving ball build: the geometry of a roving ball, including a description of the waywind.

roving integrity: the degree of bond between strands in a roving.

Copyright ASME International (BPVC)

S-glass: magnesia–alumina–silicate glass, especially designed to provide very high tensile strength glass filaments.

secondary bonding: the joining of two or more FRP subassemblies by adhesive bonding, laminate overlay, or other suitable means to form a larger component.

secondary stress: a normal stress or a shear stress developed by the constraint of adjacent parts or by self-constraint of a structure. The basic characteristic of a secondary stress is that it is self-limiting. Local inelastic deformation and minor distortions can satisfy the conditions which cause the stress to occur. Examples of secondary stress are:

(a) general thermal stress;

(b) bending stress at a gross structural discontinuity.

sequential winding: see *biaxial winding*.

shakedown: in a structure, occurs during the first few cycles of load application. The subsequent structural response is elastic, and progressive incremental inelastic deformation is absent. Elastic shakedown is the case in which the subsequent response is elastic.

shear stress: the component of stress tangent to the plane of reference.

shelf life: length of time a material can be stored under specified environmental conditions without failure to meet specifications.

shelling: a term applied to loops of roving falling to the base of a roving ball as the roving is payed out from the ball on end.

short beam shear strength: the interlaminar shear strength of a parallel composite as determined by three-point flexural loading of a short segment cut from a ring-type specimen.

silicone: semiorganic polymers made up of a skeleton structure of alternate silicon and oxygen atoms with various organic groups attached to the silicon.

single circuit winding: winding in which the filament path makes a complete traverse of the chamber, after which the following traverse lies immediately adjacent to the previous one.

size: to apply compounds to a strand, which compounds form a more or less continuous film around the strand and individual fibers.

sizing content: the percent of the total strand weight made up by the sizing, usually determined by burning off the organic sizing (see also *loss-on-ignition*).

sizing extractables: the percent of the total sizing weight that can be extracted with acetone or some other applicable solvent, measured primarily on certain reactive sizings to determine degree of cure.

skein: a continuous strand, yarn, roving, etc., wound up to some measurable length and usually used to measure various physical properties of the material.

skirt: a nonpressurized shell of revolution supporting a pressure vessel.

splice: the joining of two ends of glass fiber yarn or strand, usually by means of an air drying glue.

spray-up: a process for laying up reinforced plastics in which a special "gun" chops fiber roving and sprays resin and a curing agent or catalyst–accelerator on the mold. The lay-up is then usually worked by hand (see *contact molding*).

stacking sequence: ply ordering in a laminate. Stacking sequence does not affect the in-plane properties of a symmetric laminate. Only the ply number and ply angles are important. But stacking sequence becomes critical for the flexural properties, and the interlaminar stresses for any laminate, symmetric or not. Stacking sequence is important for asymmetric and hybrid laminates.

stiffness: ratio between the applied stress and the resulting strain. Young's modulus is the stiffness of a material subjected to uniaxial stress. For composite materials, stiffness and other properties are dependent on the orientation of the material.

strain: geometric measurement of deformation.

strand: an assembly of continuous filaments, without twist. A loosely bonded assemblage of fibers or filaments; the immediate product of the multifiber forming process. Also known as *tow*.

strand count: the number of strands in a plied yarn; the number of strands in a roving.

strand integrity: degree of bond between the filaments in a strand.

strand length differential: similar to catenary, a measure of the difference in length of the strands or yarns in a roving, the difference being caused by uneven tension, waywind, etc. (see also *catenary*)

strand tensile strength: tensile strength of a fiber strand, yarn, or roving, when tested as a straight specimen.

strength: maximum stress that a material can sustain. Like the stiffness of a composite material, strength is highly dependent on the direction and sign of the applied stress, such as axial tensile as opposed to transverse compression.

strength ratio: the ratio of the stress capacity of a single layer relative to the stress generated by an applied loading condition, as calculated using the stresses from RD-1188 and the appropriate quadratic interaction equation in RD-1188.5.

Copyright ASME International (BPVC)

stress: intensity of forces within a body.

stress concentration: increased ratio of a local stress over the average stress.

stress intensity: the equivalent intensity of combined stress, or in short, the stress intensity, is defined as twice the maximum shear stress. In other words, the stress intensity is the difference between the algebraically largest principal stress and the algebraically smallest. Tension stresses are considered positive and compression stresses are considered negative.

stress–strain relationship: a linear relation is usually assumed for calculating stress from strain or strain from stress. For multidirectional laminates, it can be generalized to include in-plane stress–strain and flexural stress– strain relations. All anisotropic relations are simple extensions of the isotropic relation. Young's modulus is the quotient of stress divided by strain.

surface mat: a very thin mat, usually 7 mils (0.18 mm) to 20 mils (0.51 mm) thick, or highly filamentized fiber.

surface treatment: on fibers, the compounds which, when applied to filaments at forming, provide a loose bond between the filaments, and provide various desired handling and processing properties. For reinforcing plastics, the surface treatment will also contain a coupling agent. Also known as *sizing*.

symmetric laminate: possessing midplane symmetry.

tack: with special reference to prepreg materials, the degree of stickiness of the resin.

thermal stress: a self-balancing stress produced by a nonuniform distribution of temperature or by differing thermal coefficients of expansion. Thermal stress is developed in a solid body whenever a volume of material is prevented from assuming the size and shape that it normally would under a change in temperature.

Two types of thermal stress are recognized, depending on the volume or area in which distortion takes place, as follows.

(a) General thermal stress, which is associated with distortion of the structure in which it occurs. Examples of general thermal stress are:

(1) stress produced by an axial temperature distribution in a cylindrical shell;

(2) stress produced by the temperature difference between a nozzle and the shell to which it is attached.

(b) Local thermal stress, which is associated with almost complete suppression of the differential expansion and thus produces no significant distortion. Examples of local thermal stress are:

(1) stress in a small hot spot in a vessel wall;

(2) thermal stress in layers of material which have different coefficients of expansion.

thermoplastic: a plastic which is capable of being repeatedly softened by increase of temperature and hardened by decrease of temperature.

thermoset: a plastic which, when cured by application of heat or chemical means, changes into a substantially infusible and insoluble material.

thixotropic: the capacity of a liquid material to have high static shear strength (viscosity) and at the same time low dynamic shear strength. Such a material can be mixed (stirred), but will not flow under the force of gravity.

tow: an untwisted group of continuous fibers (see *roving*)

transformation: variation of stiffness, strength, stress, strain, and other material properties due to the coordinate transformation or rotation of the reference coordinate axes. Transformation follows strict mathematical equations. The study of composite materials relies heavily on these transformation equations to correctly describe the directional dependency of the materials.

uniaxial load: a loading condition whereby a laminate is stressed in only one direction.

unidirectional composite: having parallel fibers in a composite. Compare with *unidirectional laminate*.

unidirectional laminate: a composite laminate in which all the fibers are oriented in the same direction.

veil: see *surface mat*.

vinyl ester: a thermoset resin with epoxy backbone, but which cures by peroxide initiation like a polyester.

voids: air pockets that have been trapped and cured into a laminate.

volatiles: materials in a roving sizing or a resin formulation which are capable of being driven off as a vapor at room or slightly elevated temperature.

wall stress: in a filament-wound part, usually a pressure vessel, the stress calculated using the load and the entire laminate cross-sectional area (see also *fiber stress*)

waywind: the number of wraps or turns that roving or yarn make from one side of the wound package back to the same side.

wet lay-up: a reinforced plastic which has liquid resin applied as the reinforcement is being laid up.

wet-out: the condition of an impregnated roving or yarn wherein substantially all voids between sized strands and filaments are filled with resin.

wet-out rate: the time required for a plastic to fill the interstices of a reinforcement material and wet the surface of the reinforcement fibers, usually determined by optical or light transmission means.

wet winding: filament-winding reinforced plastics when the fiber reinforcement is coated with liquid resin just prior to wrapping on the mandrel.

Copyright ASME International (BPVC)

winding pattern: the path of the fiber laid down by the winding machine, generally repeated within a layer, leading to the eventual complete coverage of the liner or mandrel. The term also applies to nonrepeating paths such as transitions between layers wound at different helical angles.

winding tension: in filament winding, the amount of tension on the reinforcement as it makes contact with a mandrel.

yardage: see *yield*.

yield: the number of yards of yarn, roving strand, etc., per pound of glass fibers; the reciprocal of weight per yard.

Copyright ASME International (BPVC)

MANDATORY APPENDIX 5
SPECIFIC GRAVITY OF LIQUID RESINS

5-100 INTRODUCTION

This Article specifies the procedure that shall be used to determine the specific gravity. This is accomplished by weighing a standard volume of liquid at a specific temperature and converting this weight to specific gravity.

5-200 APPARATUS

(a) laboratory balance (0.1 g sensitivity)
(b) weight per gallon cup (water capacity 83.2 mL) with lid (Gardner catalog No. 9652 or equivalent)
(c) thermometer (ASTM No. 17C)

5-300 SAFETY PRECAUTIONS

See specification for material to be tested.

5-400 PROCEDURE

(a) Precondition the resin sample and weight per gallon cup for 20 min at 25°C ± 0.1°C. Insert the cup and the resin sample separately in a large beaker. Place in a 25°C water bath.
(b) Tare weigh the empty cup and lid to ±0.1 g.
(c) Fill the cup to the brim with the resin sample, bubble free.
(d) Place cover on lid and force down the seat firmly.
(e) Wipe the cup clean on the outside.
(f) Weigh the filled cup to ±0.1 g.

5-500 CALCULATIONS

(a) Weight (lb/gal) = [weight of full cup (g) – tare weight (g)]/10.
(b) Specific gravity = weight (lb/gal)/8.33.

5-600 REPORT

Record specific gravity determination in the Quality Control Test Report.

Copyright ASME International (BPVC)

MANDATORY APPENDIX 6
STRUCTURAL LAMINATE VISUAL ACCEPTANCE CRITERIA

6-100 STRUCTURAL LAMINATE VISUAL ACCEPTANCE CRITERIA

For Class I pressure vessels, see Table 6-100.1. For Class II pressure vessels, see Table 6-100.2.

Copyright ASME International (BPVC)

Table 6-100.1
Structural Laminate Visual Acceptance Criteria for Class I Pressure Vessels

Imperfection Name	Definition of Imperfection	Maximum Size and Cumulative Sum of Imperfections Allowable (After Repair) [Note (1)], [Note (2)], [Note (3)]
Air bubble (void)	Air entrapment within and between the plies of reinforcement, usually spherical in shape	$\frac{1}{8}$ in. (3 mm) max. diam., max. density 4 per sq in. (6 per 10 cm^2); $\frac{1}{16}$ in. (1.5 mm) max. diam., max. density 10 per $in.^2$ (15 per 10 cm^2)
Blister	Rounded elevation of the surface of the laminate with boundaries that may be sharply defined, somewhat resembling in shape a blister on the human skin	Pressure side: none; nonpressure side: $\frac{1}{8}$ in. (3 mm) max. diam., max. density 1 per ft^2 (1 per 1 000 cm^2), none less than 2 in. (50 mm) apart
Burned areas from excessive exotherm	Showing evidence of thermal decomposition through discoloration or heavy distortion	None
Chips	Small pieces broken off an edge of the laminate that includes fiber breakage	* $\frac{1}{16}$ in. (1.5 mm) diam. or $\frac{1}{4}$ in. (6 mm) length by $\frac{1}{16}$ in. (1.5 mm) deep max.
Cracks	Ruptures or debond of portions of the laminate	None: pressure or nonpressure side
Crazing	Fine cracks at the surface of the laminate	Max. 1 in. (25 mm) long by $\frac{1}{64}$ in. (1 mm) deep, max. density 5 in any square foot (1 000 cm^2)
Delamination (internal)	Separation of the layers in a laminate	None
Delamination (edge)	Separation of the layers of material at the edge of laminate	Max. dimension $\frac{1}{8}$ in. (3 mm) and must not contact the process fluid
Dry spot	Area of incomplete surface film where the reinforcement has not been wetted with resin	None
Edge exposure	Exposure of multiple layers of the reinforcing matrix to the environment, usually as a result of shaping or cutting a section of laminate	None
Foreign inclusion	Particles included in a laminate which are foreign to its composition (not a minute speck of dust)	*Max. $\frac{1}{8}$ in. (3 mm) diam., never to penetrate lamination to lamination; must be fully resin encapsulated
Fish-eye	Small globular mass which has not blended completely into the surrounding material and is particularly evident in a transparent or translucent material	*Pressure side: none; nonpressure side: $\frac{1}{8}$ in. (3 mm) diam. max.
Pimples (nonpressure side)	Small, sharp, conical elevations on the surface of a laminate	No limit; must be fully resin filled and wetted
Pit	Small crater in the surface of a laminate	* $\frac{1}{8}$ in. (3 mm) diam. max. by $\frac{1}{16}$ in. (1.5 mm) deep max.; no exposed fibers

Copyright ASME International (BPVC)

Table 6-100.1
Structural Laminate Visual Acceptance Criteria for Class I Pressure Vessels (Cont'd)

Imperfection Name	Definition of Imperfection	Maximum Size and Cumulative Sum of Imperfections Allowable (After Repair) [Note (1)], [Note (2)], [Note (3)]
Porosity	Presence of numerous visible tiny pits (pinholes), approximate dimension 0.010 in.	None shall fully penetrate the surface; no more than 15 per in.^{2} (24 per 10 cm^2); no exposed fibers
Scratches	Shallow marks, grooves, furrows, or channels caused by improper handling	*Pressure side: none; nonpressure side: none more than 6 in. (150 mm) long; no exposed fibers
Wrinkles and creases	Generally linear, abrupt changes in surface plane caused by laps of reinforcing layers, irregular mold shape, or polyester film overlap	Filament wound: none; others: max. deviation 20% of wall or $\frac{1}{8}$ in. (3 mm), whichever is less
Band width gap (filament winding)	The space between successive winding fiber bands which are intended to lay next to each other	None
Band width overlap (filament winding)	An area where the edge of a fiber band has laid on top of a previous fiber band, although intended to lay next to each other	2 strands max.
Band width splaying (filament winding)	An unintended space between individual fibers in a fiber band that results in a gap between fibers	None [Note (4)]
Strand drop-out (filament winding)	When one or more strands of a fiber band ceases to be applied to the vessel shell being wound due to breakage or inadequate supply	None
Allowable cumulative sum of imperfections denoted by an asterisk (*)	Maximum allowable in any square foot	5
	Maximum allowable in any square yard (square meter)	30 (36)
Maximum percent repairs	The maximum allowable area of repairs made in order to pass visual inspection	3% to structural

GENERAL NOTE: Unless specifically called out, acceptance criteria applies to pressure and nonpressure sides.

NOTES:
(1) Above acceptance criteria apply to condition of laminate after repair and hydrotest.
(2) Noncatalyzed resin is not permissible to any extent in any area of the laminate.
(3) Imperfections subject to cumulative sum limitations are highlighted with an asterisk (*).
(4) Except as allowed by the manufacturing procedure specification and qualification test record to include gap spacing between fibers.

Copyright ASME International (BPVC)

Table 6-100.2
Structural Laminate Visual Acceptance Criteria for Class II Pressure Vessels

Imperfection Name	Definition of Imperfection	Maximum Size and Cumulative Sum of Imperfections Allowable (After Repair) [Note (1)],[Note (2)],[Note (3)]
Air bubble (void)	Air entrapment within and between the plies of reinforcement, usually spherical in shape	$\frac{1}{8}$ in. (3 mm) max. diam., max. density 4 per in.^{2} (6 per 10 cm^2); $\frac{1}{16}$ in. (1.5 mm) max. diam., max. density 10 per in.^{2} (15 per 10 cm^2)
Blister (nonpressure side)	Rounded elevation of the surface of the laminate with boundaries that may be sharply defined, somewhat resembling in shape a blister on the human skin	$\frac{1}{4}$ in. (6 mm) max. diam. by $\frac{1}{8}$ in. (3 mm) high max., max. density 1 per ft^2 (1 per 1 000 cm^2), none less than 2 in. (50 mm) apart
Burned areas from excessive exotherm	Showing evidence of thermal decomposition through discoloration or heavy distortion	None
	Small pieces broken off an edge of the laminate that includes fiber breakage	* $\frac{1}{4}$ in. (6 mm) diam. or $\frac{1}{2}$ in. (13 mm) length by $\frac{1}{16}$ in. (1.5 mm) deep max.
Cracks	Ruptures or debond of portions of the laminate	None
Crazing (nonpressure side)	Fine cracks at the surface of the laminate	Max. 1 in. (25 mm) long by $\frac{1}{64}$ in. (0.4 mm) deep, max. density 5 in any square foot (1 000 cm^2)
Delamination (internal)	Separation of the layers in a laminate	None
Delamination (edge)	Separation of the layers of material at the edge of laminate	Max. dimension $\frac{1}{8}$ in. (3 mm) and must not contact the process fluid
Dry spot	Area of incomplete surface film where the reinforcement has not been wetted with resin	None
Edge Exposure	Exposure of multiple layers of the reinforcing matrix to the environment, usually as a result of shaping or cutting a section of laminate	None
Foreign inclusion	Particles included in a laminate which are foreign to its composition (not a minute speck of dusk)	*Max. $\frac{3}{8}$ in. (10 mm) diam., never to penetrate lamination to lamination; must be fully resin encapsulated
Fish-eye	Small globular mass which has not blended completely into the surrounding material and is particularly evident in a transparent or translucent material	* $\frac{1}{8}$ in. (3 mm) diam. max.
Pimples (nonpressure side)	Small, sharp, conical elevations on the surface of a laminate	No limit; must be fully resin filled and wetted
Pit (nonpressure side)	Small crater in the surface of a laminate	* $\frac{1}{4}$ in. (6 mm) diam. max. by $\frac{1}{16}$ in. (1.5 mm) deep max.; no exposed fibers
Porosity (nonpressure side)	Presence of numerous visible tiny pits (pinholes), approximate dimension 0.010 in.	None shall fully penetrate the surface; no more than 15 per in.^{2} (24 per 10 cm^2); no exposed fibers
Scratches (nonpressure side)	Shallow marks, grooves, furrows, or channels caused by improper handling	*None shall be more than 6 in. long (150 mm); no exposed fibers

Copyright ASME International (BPVC)

Table 6-100.2
Structural Laminate Visual Acceptance Criteria for Class II Pressure Vessels (Cont'd)

Imperfection Name	Definition of Imperfection	Maximum Size and Cumulative Sum of Imperfections Allowable (After Repair) [Note (1)],[Note (2)],[Note (3)]
Wrinkles and creases	Generally linear, abrupt changes in surface plane caused by laps of reinforcing layers, irregular mold shape, or polyester film overlap	Filament wound: none; others: max. deviation 20% of wall or $\frac{1}{8}$ in. (3 mm), whichever is less
Band width gap (filament winding)	The space between successive winding fiber bands which are intended to lay next to each other	None
Band width overlap (filament winding)	An area where the edge of a fiber band has laid on top of a previous fiber band, although intended to lay next to each other	2 strands max.
Band width splaying (filament winding)	An unintended space between individual fibers in a fiber band that results in a gap between fibers	None
Strand drop-out (filament winding)	When one or more strands of a fiber band ceases to be applied to the vessel shell being wound due to breakage or inadequate supply	None
Allowable cumulative sum of imperfections denoted by an asterisk (*)	Maximum allowable in any square foot	5
	Maximum allowable in any square yard (square meter)	30 (36)
Maximum percent repairs	The maximum allowable area of repairs made in order to pass visual inspection	3% to structural

NOTES:
(1) Above acceptance criteria apply to condition of laminate after repair and hydrotest.
(2) Noncatalyzed resin is not permissible to any extent in any area of the laminate.
(3) Imperfections subject to cumulative sum limitations are highlighted with an asterisk (*).

Copyright ASME International (BPVC)

MANDATORY APPENDIX 7
STANDARD UNITS FOR USE IN EQUATIONS

Table 7-100.1
Standard Units for Use in Equations

Quantity	U.S. Customary Units	SI Units
Linear dimensions (e.g., length, height, thickness, radius, diameter)	inches (in.)	millimeters (mm)
Area	square inches ($in.^2$)	square millimeters (mm^2)
Volume	cubic inches ($in.^3$)	cubic millimeters (mm^3)
Section modulus	cubic inches ($in.^3$)	cubic millimeters (mm^3)
Moment of inertia of section	$inches^4$ ($in.^4$)	$millimeters^4$ (mm^4)
Mass (weight)	pounds mass (lbm)	kilograms (kg)
Force (load)	pounds force (lbf)	newtons (N)
Bending moment	inch-pounds (in.-lb)	newton-millimeters (N·mm)
Pressure, stress, stress intensity, and modulus of elasticity	pounds per square inch (psi)	megapascals (MPa)
Energy (e.g., Charpy impact values)	foot-pounds (ft-lb)	joules (J)
Temperature	degrees Fahrenheit (°F)	degrees Celsius (°C)
Absolute temperature	Rankine (°R)	kelvin (K)
Fracture toughness	ksi square root inches ($ksi\sqrt{in.}$)	MPa square root meters ($MPa\sqrt{m}$)
Angle	degrees or radians	degrees or radians
Boiler capacity	Btu/hr	watts (W)

Copyright ASME International (BPVC)

MANDATORY APPENDIX 8
CLASS III VESSELS WITH LINERS FOR HIGH PRESSURE FLUIDS IN STATIONARY SERVICE

(19)

8-100 SCOPE

8-100.1 General Construction Description. This construction method uses a laminate of continuous multidirectional filaments of a specified glass or carbon fiber with a specified resin that is circumferentially and longitudinally wound in a systematic manner under controlled tension over the cylindrical shell and heads of a metallic or nonmetallic liner and cured in place. Hybrid designs incorporating both glass and carbon fiber within a layer or in separate layers are allowed under this Appendix.

(19) **8-100.2 Construction Rules.** Each Class III vessel for high pressure fluid service shall comply with all existing rules of this Section unless otherwise stated as additional requirements and exemptions in this Appendix. All vessels shall be fabricated with polar boss openings only and shall meet the criteria of RG-404.2.

8-100.3 Metallic Load-Sharing Pressure Parts. Metallic load bearing pressure parts shall comply with the applicable requirements of Section VIII, Division 3. Welding on load bearing pressure parts shall be made by Fabricators holding a valid ASME Certification Mark with U, U2, or U3 designator. Code "Part" stamping of the welded metallic pressure parts is required.

Work such as machining, forming, nondestructive examination, etc., may be performed by others. Analysis to meet Section VIII, Division 3 requirements must be performed by a capable design engineer meeting the criteria given in Section VIII, Division 3, Part KG, KG-324.1. It is the vessel Fabricator's responsibility to ensure that all work performed complies with the applicable requirements. Nonwelded load-sharing pressure parts shall have material certification in accordance with Section VIII, Division 3, Part KM, KM-101, and shall be marked in accordance with Section VIII, Division 3, Part KM, KM-102.2 with the name or trademark of the manufacturer and with other such markings as will serve to identify the particular parts with accompanying material certification.

8-100.4 Nonload-Sharing Metallic Liner. The nonload-sharing metallic liner shall comply with the requirements of Section VIII, Division 1, 2, or 3 as specified by the Fabricator. Welding on metallic liners shall be made by Fabricators holding a valid ASME Certification Mark with U, U2, or U3 designator.

8-100.5 Liner Scope. The outside diameter of the metallic or nonmetallic liner shall not exceed 100 in. (2.5 m). The burst pressure of a nonload-sharing liner shall be less than 10% of the nominal burst pressure of the finished vessel.

The burst pressure of a load-sharing liner shall not exceed 50% of the nominal burst pressure of the finished vessel.

8-100.6 Service Life. The service life of the Class III vessel shall be as specified in the User's Design Specification. Maximum service life for Class III vessels constructed under the rules of this Appendix shall be limited to 20 yr from the date of manufacture as noted on Form CPV-1.

8-100.7 Design Pressure. The internal design pressure for the Class III vessel shall not be less than 3,000 psi (21 MPa) nor greater than 15,000 psi (103 MPa).

8-100.8 Permitted Fluids and Compatibility (19)

(a) Fluids allowed include hydrogen, methane, natural gas, helium, nitrogen, water, hydraulic oils, oil and gas industry drilling fluids, or fluids that are inert.

(b) Toxic gas mixtures shall not be permitted.

(c) Contained fluids shall be compatible with the liner, composite, and nozzle materials.

(d) If compatibility is not already demonstrated, testing shall be conducted to confirm compatibility. Confirmation of compatibility shall be reported in the remarks section of the Fabricator's Data Report.

(e) The User is responsible for specifying the contained fluids in the Design Specification.

8-200 GENERAL

8-200.1 Supplementary Fabricator's Responsibilities.

(a) The Fabricator shall be responsible for preparation of a Manufacturing Specification to control essential variables during the manufacturing process.

Copyright ASME International (BPVC)

(b) It shall be the Fabricator's responsibility to conduct Qualification Tests to qualify the Class III vessel in accordance with the requirements of this Appendix.

(c) The Fabricator shall be responsible to conduct Production Examinations and Tests as required by this Appendix. The test results shall be included in the Fabricator's Construction Records.

(19) **8-200.2 Supplementary Inspector Qualifications.** Inspection of the materials and their application shall be carried out by a qualified Inspector. The Inspector shall have been qualified by a written examination under the rules of the National Board of Boiler and Pressure Vessel Inspectors.

8-200.3 Inspector's Duties. It is the duty of the Inspector to make the inspections required by the rules of this Appendix and such other inspections and investigations as are necessary in his judgment to verify that

(a) the material and manufacturing procedures being used conform to the requirements of the specified Manufacturing Specification, this Appendix, and the requirements of Section X and Section VIII, Division 3

(b) the examinations and tests required by this Appendix have been completed and that the results are acceptable

8-200.4 Codes and Standards Referenced. These additional codes and standards not already referenced in Table 1.1 are referenced in this Appendix.

(a) API 579-1/ASME FFS-1, Fitness-For-Service

(b) ASNT-CP-189, ASNT Standard for Qualification and Certification of Nondestructive Testing Personnel

(c) ASNT Recommended Practice No. SNT-TC-1A, 2001 Edition, Recommended practice for Personnel Qualification and Certification in Nondestructive Testing

(d) ASTM D2196, Standard Test Methods for Rheological Properties of Non-Newtonian Materials by Rotational (Brookfield type) Viscometer

(e) ASTM D2344/D2344M, Standard Test Method for Short-Beam Strength of Polymer Matrix Composite Materials and Their Laminates

(f) ASTM D4018, Standard Test Methods for Properties of Continuous Filament Carbon and Graphite Fiber Tows

(g) ASTM D4052, Standard Test Method for Density and Relative Density of Liquids by Digital Density Meter

(h) ASTM D4814, Automotive Spark-Ignition Engine Fuel

8-300 MATERIALS

(19) **8-300.1 General Materials Requirements.**

(a) Metallic components used in the construction of the Class III vessel shall meet the requirements of Section VIII, Division 3.

(b) Laminates used in the construction of the Class III vessel shall comply with the requirements listed in 8-300.2.

(c) All material used in the manufacture of the laminate shall be traceable to material test reports or certificates of compliance and shall be traceable to an individual Class III vessel and documented in the Fabricator's Construction Records.

8-300.2 Laminates.

(a) Fiber-reinforced plastic materials are designated as laminates. These materials shall be used, under the rules of this Appendix, as a circumferential and longitudinal filament-wound outer layer for the Class III vessel.

(b) Laminates, as herein considered, are composite structures consisting of glass or carbon fibers embedded in a resin matrix.

(c) The Fabricator shall keep on file the published specifications for all laminate materials used in each Class III vessel manufactured, the material supplier's recommendations for storage conditions and shelf life for all laminate materials, and the material supplier's certification that each shipment conforms to the published specification requirements. This data shall be part of the Fabricator's Construction Records.

8-300.3 Fibers. (19)

(a) Glass Fibers

(1) Glass fibers used in any of the manufacturing processes permitted by this Case shall be one or more of the following glass compositions:

(-a) Type E glass

(-b) Type S glass

(-c) Type E-CR glass

(2) The material supplier shall certify that the fibers conform to the Fabricator's specifications for the product and that the minimum strength and modulus, measured in accordance with ASTM D2343, are not less than the specified minimum values for resin-impregnated strands.

(b) Carbon Fibers

(1) The carbon fibers used in any of the manufacturing processes permitted by this Appendix shall be polyacrylonitrile (PAN) based carbon fiber tows having mechanical properties meeting the requirements of a procurement document prepared by the Fabricator.

(2) The material supplier shall certify that the fibers conform to the Fabricator's specifications for the product and that the minimum strength and modulus, measured in accordance with ASTM D4018, or identified equivalent standards accepted by the Inspector, are not less than the specified minimum values for resin-impregnated strands.

(3) When carbon fibers are used, galvanic corrosion protection is required for the metal components in contact with the composite. An inner glass filament-wound and resin layer may be used for metallic liners. A glass

Copyright ASME International (BPVC)

Table 8-300.4.1-1
Resin Systems: Required Certifications and Tests

Resin System	Required Certifications and Tests	Applicable ASTM Specification
Polyester/vinyl ester	Viscosity	ASTM D445/D2196
	Acid number	ASTM D1045
	Specific gravity	Wt. per gallon cup or ASTM D4052
Epoxy	Viscosity	ASTM D445/D2196
	Epoxide equivalent	ASTM D1652
	Specific gravity	Wt. per gallon cup or ASTM D4052

cloth and resin layer may be used between a metallic end nozzle and the laminate. Identified equivalent methods accepted by the Inspector may be used as the corrosion protection layer.

8-300.3.1 Fiber Surface Treatment. The surface of the fiber shall be treated to provide a bond between the fiber and resin matrix as needed.

8-300.4 Resin System. The resin system shall consist of an epoxy, polyester or vinyl ester, plus the resin Fabricator's recommended promoters and curing agents. No filler, pigment, thixotrope, or dye that will interfere with the natural color of the resin shall be used except as permitted by the Manufacturing Specification. If required in the User's Design Specification, the Class III vessel may be painted.

8-300.4.1 Resin Material Requirements

(a) The resin materials used in the manufacture of the Class III vessel shall be the same as those specified in the Manufacturing Specification. Each resin shall be traceable by the name of its supplier and the trade name or number of that supplier. The resin supplier shall supply to the Fabricator a Certificate of Analysis for each resin used. It shall include the following information:

(1) resin identification
(2) batch number(s)
(3) date of manufacture
(4) shelf life

(b) The resin supplier shall certify, for each batch shipped, the value and the limits required by the specification of the properties identified in Table 8-300.4.1-1. Resin material outside the shelf life shall be either retested by the resin manufacturer and certified to the original properties or rejected. The values obtained for viscosity and specific gravity for the resin alone shall be within the limits of the supplier's specification for that resin and as listed in the Manufacturing Specification. The values obtained for gel time and peak exotherm temperature shall be for a particular resin/curing system test formulation and temperature, and shall be within the limits listed in the Manufacturing Specification. The test formulation and temperature shall be representative of the formulations used during Class III vessel manufacture. These test results shall be certified by the Fabricator and shall be included in the Fabricator's Construction Records.

(c) The tolerance limits for the test formulation, as listed in the Manufacturing Specification, may be established by either the resin supplier or the Fabricator. The tolerance limits shall be established using formulation components having Fabricator-specified material characteristics. The tolerance limits established shall be within a sufficiently narrow range such that test results outside this range would reflect deviations in component material characteristics and alert the Fabricator of possible material irregularities.

(d) The Fabricator shall establish a maximum use temperature for the resin/cure system used. This may be in conjunction with the resin supplier or independent laboratory, and may be based on heat distortion temperature or glass transition temperature. The Fabricator shall reestablish and redocument the maximum use temperature at least every twelve months using current batches of resin and curing agent. The maximum use temperature shall be recorded on the Manufacturing Specification. A record of these determinations shall become part of the Fabricator's Construction Records.

8-300.5 Curing Agents. The curing agents used, the resin-to-curing-agent ratio and the curing procedure followed in the Class III vessel manufacture shall be as specified in the Manufacturing Specification. Each curing agent shall be traceable by the supplier's name, the supplier's designation, and the generic name.

8-300.5.1 Laminate Cure. The Fabricator shall ensure that the resin applied to the Class III vessel is properly cured using a test specimen. Proper cure shall be demonstrated by using the Barcol test in accordance with ASTM D2583 or other appropriate method. Barcol readings shall be within the tolerance specified by the resin supplier. If the resin supplier does not provide Barcol specifications for the resin/curing system used, the Fabricator shall establish Barcol specifications. Barcol specifications established by the Fabricator shall be documented. Barcol specifications shall become part of the Fabricator's Construction Records.

8-300.6 Interlaminar Shear Strength. The laminates used in manufacturing Class III vessel shall have minimum interlaminar shear strengths of 2,000 psi (13.8 MPa) for all resins, determined in accordance with ASTM D2344. The test shall be performed following the boiling of the test sample in water for 24 hr. The test results shall be included in the Fabricator's Construction Records. The measured interlaminar shear strength shall be recorded on Form CPV-2.

Copyright ASME International (BPVC)

(19) **8-300.6.1 Nonmetallic Liner Materials.** All nonmetallic liners shall be considered nonload sharing. The liner shall be manufactured from a material suitable for service with the contained fluid(s). The liner material supplier shall verify that each batch of liners have the specified material chemistry and mechanical properties and provide a certificate of conformance to the Class III vessel Fabricator documenting the verification.

8-400 DESIGN

(19) **8-400.1 Allowable Stress Rules.** Stress analysis shall be carried out and documented in the Fabricator's Construction Records. The stresses in the laminate and in the liner shall be calculated using appropriate analytical methods that address the nonlinear behavior. The thickness and material properties used in stress calculations shall be chosen to give accurate results, and analysis results shall be confirmed with strain gages or similar methods during testing.

The circumferential and longitudinal stresses generated in the laminate layer shall be used to resist loads due to internal pressure, thermal expansion, and all other circumferential and longitudinal loads, including bending loads caused by the contained fluid.

The maximum fiber stress at any location in the laminate shall not exceed 67% of the tensile strength of the fiber during the autofrettage pressure load for vessels with load-sharing liners.

The maximum fiber stress at any location in the laminate layer shall not exceed 28.5% for glass fibers and 44.4% for carbon fibers of the tensile strength of the fiber at design conditions.

The calculation of stresses shall consider the least favorable effects of geometric irregularities (e.g., out-of-roundness), weld peaking, reinforcement, and offsets as well as mismatches of Categories A and B welded liners.

8-400.2 Design Pressure. The design pressure of the Class III vessel shall be specified in the User's Design Specification. The maximum design pressure for Class III vessel shall not be less than 3,000 psi (21 MPa) or greater than 15,000 psi (103 MPa).

8-400.3 Maximum Design Temperature. The Maximum Design Temperature of the laminate shall be the same as the Maximum Design Temperature of the Class III vessel and shall be specified in the User's Design Specification. The Maximum Design Temperature shall be at least 35°F (19°C) below the maximum use temperature of the resin as documented in the Manufacturing Specification, but in no case shall it exceed 185°F (85°C).

8-400.4 Minimum Design Temperature. The Minimum Design Temperature to which a Class III vessel may be constructed under this Appendix shall not be colder than −65°F (−54°C).

8-400.5 Vessel Supports. Vessel supports shall be designed to function without damaging the vessel considering all loads resulting from transportation and operation.

8-400.6 Protective Layer. An optional external layer of laminate may be provided for protection of the structural laminate layer from damage due to impact, ultraviolet radiation, or other environmental exposure, fire or abrasive conditions, and in-service degradation of the laminate for the life of the Class III vessel under the service conditions as specified in the User's Design Specification. This layer shall not be considered in the calculation on the stress levels in the vessel and shall not be applied to the vessel used for the qualification testing.

8-400.7 Hybrid Designs. Hybrid construction (using more than one type of reinforcing fiber) is permitted. The strength of the individual types of fibers used in hybrid construction may be verified by testing of vessels reinforced with a single type of fiber. The test can be performed on subscale vessels. In a hybrid construction, the applicable Stress Ratio requirements must be met in one of the two following ways:

(a) If load sharing between the various fiber reinforcing materials is considered a fundamental part of the design, each fiber must meet the stated Stress Ratio requirements.

(b) If load sharing between fibers is not considered as a fundamental part of the design, then one of the reinforcing fibers must be capable of meeting the Stress Ratio requirements even if all other fiber reinforcing materials are removed.

8-500 FABRICATION

8-500.1 Manufacturing Specification.

(a) The Manufacturing Specification shall specify, as a minimum, all pertinent material properties data, the means by which the laminate is applied to the liner, and all other significant process data associated with the laminate and the Class III vessel design. The Manufacturing Specification shall include tolerance limits for all appropriate material properties, process conditions such as time and temperature, acceptable test result values, compositions of resins, fibers, and curing agents, etc., as further defined by the rules of this Appendix. The Manufacturing Specification shall form part of the Fabricator's Construction Records.

(b) As a minimum, the essential variables provided below shall be held within tolerances as specified in the Manufacturing Specification.

(1) Essential variables for liner and nozzles

(-a) material(s) including limits of chemical analysis

Copyright ASME International (BPVC)

(-b) dimensions, minimum thickness, straightness, and out-of-roundness with tolerances

(-c) process and specification of manufacture

(-d) heat-treatment, temperatures, duration, and tolerances

(-e) inspection procedures (minimum requirements)

(-f) material properties

(-g) dimensional details of nozzle threads and any other permanent features

(-h) method of sealing nozzle to nonload-sharing liner for bonded bosses

(-i) autofrettage procedure for metallic lined vessels

(2) Essential variables for laminate materials

(-a) fiber material, specification, and mechanical properties requirements

(-1) the fiber content in the laminate shall conform to that set forth in the Specification

(-b) resin system, components, curing agent, and accelerators

(-c) laminate construction including the number of strands used, the allowable gap between bands, the allowable gap within bands, overlap in the laminate, and details of prestressing where applicable

(-d) curing process, temperatures, duration, and tolerances

(-1) If other than ambient temperature cure is employed, the design and operation of the curing equipment shall provide uniform heating over the entire surface of the vessel. Heating may be done from the inside or outside of the vessel, or from both inside and outside. The cure times and temperatures shall conform to those required by the Manufacturing Specification. Heat up and cool down times shall be excluded.

(3) Essential variables for laminate manufacture

(-a) Patterns. Specific winding patterns for the continuous fiber strands shall be used as defined in the qualified Manufacturing Specification. Any winding pattern that places the filaments in the desired orientation and is designated in the Manufacturing Specification may be used.

(-b) Filament Winding

(-1) Tensioning. Tension on the strands of filaments during the winding operation shall be controlled to ensure a uniform application of the composite reinforcement onto the liner.

(-2) Winding Speed. The speed of winding shall be limited only by the ability to meet the tensioning requirements, to conform to the specified winding pattern, and to ensure adequate resin impregnation.

(-3) Bandwidth and Spacing. The bandwidth and spacing shall conform to those specified in the Manufacturing Specification.

8-500.2 Variation From Manufacturing Specification. Any variation in the essential variables from the tolerances provided in the Manufacturing Specification shall result in rejection of the Class III vessel.

8-600 EXAMINATION

8-600.1 Qualification of Nondestructive Examination Personnel. The Fabricator shall certify that each examiner performing visual tests according to the Appendix has been qualified to the requirements of Section V, Article 9.

8-600.2 Supplementary Examination Requirements.

(a) The Fabricator completing a Class III vessel or vessel part shall be responsible for conducting the examinations required by this paragraph. Examination shall be carried out after the hydrostatic test.

(b) Each Class III vessel shall be subjected to the examinations required by this paragraph and shall conform to the specified requirements, with results recorded in Production Test Reports. The Class III vessel Production Test Report shall become part of the Fabricator's Construction Records.

8-600.2.1 Visual Examination. Each Class III vessel shall be visually examined, using a suitable light source, to determine whether there are any imperfections of the type specified in Table 8-600.2.1-1 or Table 8-600.2.1-2. If an external protective layer or paint is applied, the laminate shall be examined as required during winding, or prior to application of the protective layer or paint, to ensure that there are no unacceptable defects.

8-600.2.2 Design Dimensions Examination. Each Class III vessel shall be examined for conformance with dimensions and tolerances shown on the design drawings.

8-600.2.3 Repair of Imperfections. In the event that any of the unacceptable imperfections listed in Table 8-600.2.1-1 or Table 8-600.2.1-2 extend into the structural layer or the structural fibers are cut or in any way damaged, the imperfection shall be deemed unrepairable and the Class III vessel shall be rejected. If the unacceptable imperfections listed in Table 8-600.2.1-1 or Table 8-600.2.1-2 extend only into the nonstructural, protective layer of the laminate, the layer may be repaired, unless prohibited by the Manufacturing Specification. The repaired area shall maintain the minimum thickness, fiber content, and protective capabilities of the unrepaired protective layer.

8-600.2.4 Visual Examination of Repaired Areas. Each repaired area shall be examined visually and shall meet all the acceptance requirements of Table 8-600.2.1-1 or

Copyright ASME International (BPVC)

Table 8-600.2.1-1
Visual Acceptance Criteria for FRP Laminate (U.S. Customary Units)

Imperfection Name	Definition of Imperfection	Maximum Size and Cumulative Sum of Imperfections Allowable (After Repair) [Note (1)] [Note (2)] [Note (3)]
Burned areas from excessive exotherm	Showing evidence of thermal decomposition through discoloration or heavy distortion	None
Chips *	Small pieces broken off an edge of the laminate that includes fiber breakage	1/16 in. dia. or 1/4 in. length by 1/16 in. deep max.
Cracks	Actual ruptures or debond of portions of the laminate	None
Foreign inclusion *	Small globular mass that has not blended completely into the surrounding material and is particularly evident in a transparent or translucent material	1/8 in. dia. max.
Pimples	Small, sharp, conical elevations on the surface of a laminate	No limit; must be fully resin filled and wetted
Pit *	Small crater in the surface of a laminate	1/8 in. dia. max. by 1/16 in. deep max.; no exposed fibers
Porosity	Presence of numerous visible tiny pits (pinhole), approximate dimension 0.010 in.	None to fully penetrate the surface; no more than 15/in.^{2} ; no exposed fibers
Scratches *	Shallow marks, grooves, furrows, or channels caused by improper handling	None more than 6 in. long; no exposed fibers
Wrinkles and creases	Generally linear, abrupt changes in surface plane caused by laps of reinforcing layers, irregular mold shape, or polyester film overlap	None
Allowable cumulative sum of imperfections denoted by an asterisk (*)	Maximum allowable in any square foot	5
	Maximum allowable in any square yard	30
Band width gap (filament winding)	The space between successive winding fiber bands which are intended to lay next to each other	None [Note (4)]
Band width overlap (filament winding)	An area where the edge of a fiber band has laid on top of a previous fiber band, although intended to lay next to each other	2 strands max. [Note (4)]
Band width splaying (filament winding)	An unintended space between individual fibers in a fiber band that results in a gap between fibers	None [Note (4)]

NOTES:
(1) Above acceptance criteria apply to condition of laminate after repair and hydrostatic test.
(2) Noncatalyzed resin is not permissible to any extent in any area of the laminate.
(3) Imperfections subject to cumulative sum limitation are highlighted with an asterisk (*).
(4) Except as allowed by the manufacturing specification.

Copyright ASME International (BPVC)

Table 8-600.2.1-2
Visual Acceptance Criteria for FRP Laminate (SI Units)

Imperfection Name	Definition of Imperfection	Maximum Size and Cumulative Sum of Imperfections Allowable (After Repair) [Note (1)] [Note(2)] [Note (3)]
Burned areas from excessive exotherm	Showing evidence of thermal decomposition through discoloration or heavy distortion	None
Chips *	Small pieces broken off an edge of the laminate that includes fiber breakage	1.6 mm dia. or 6.4 mm length by 1.6 mm deep max.
Cracks	Actual ruptures or debond of portions of the laminate	None
Foreign inclusion *	Small globular mass that has not blended completely into the surrounding material and is particularly evident in a transparent or translucent material	3.2 mm dia. max.
Pimples	Small, sharp, conical elevations on the surface of a laminate	No limit; must be fully resin filled and wetted
Pit *	Small crater in the surface of a laminate	3.2 mm dia. max. by 1.6 mm deep max.; no exposed fibers
Porosity	Presence of numerous visible tiny pits (pinhole), approximate dimension 0.25 mm	None to fully penetrate the surface; no more than $^{15}/_{650}$ mm^2 ; no exposed fibers
Scratches *	Shallow marks, grooves, furrows, or channels caused by improper handling	None more than 15.2 cm long; no exposed fibers
Wrinkles and creases	Generally linear, abrupt changes in surface plane caused by laps of reinforcing layers, irregular mold shape, or polyester film overlap	None
Allowable cumulative sum of imperfections denoted by an asterisk (*)	Maximum allowable in any 930 cm^2	5
	Maximum allowable in 0.84 m^2	30
Band width gap (filament winding)	The space between successive winding fiber bands which are intended to lay next to each other	None [Note (4)]
Band width overlap (filament winding)	An area where the edge of a fiber band has laid on top of a previous fiber band, although intended to lay next to each other	2 strands max. [Note (4)]
Band width splaying (filament winding)	An unintended space between individual fibers in a fiber band that results in a gap between fibers	None [Note (4)]

NOTES:
(1) Above acceptance criteria apply to condition of laminate after repair and hydrostatic test.
(2) Non-catalyzed resin is not permissible to any extent in any area of the laminate.
(3) Imperfections subject to cumulative sum limitation are highlighted with an asterisk (*).
(4) Except as allowed by the manufacturing specification.

Table 8-600.2.1-2. The repaired area shall have translucency and surface finish comparable to the remainder of the vessel.

8-600.2.5 Thickness Check. Visual evidence of variation in thickness shall be explored and the thickness shall be verified to meet the minimum required thickness in the Fabricator's Design Report. Thickness less than the value specified in the Fabricator's Design Report shall not be permitted.

8-600.2.6 Surface Examination. After the production hydrotest, the metallic pressure parts meeting the requirements of Section VIII, Division 3 shall be subject to a surface exam in accordance with Section VIII, Division 3, Part KE, KE-400 by the vessel Fabricator. Only the accessible portions of these parts shall be examined by liquid penetrant or magnetic particle examination with acceptance criteria per Section VIII, Division 3, Part KE, KE-233.2.

8-600.2.7 Acoustic Emission Examination

8-600.2.7.1 Use and Test Objectives. All Class III production vessels shall be subject to an acoustic emission examination to detect hidden flaws in the laminate. Any two vessels used for the design qualification, and any one vessel used for qualification of a design variant change, shall be subject to an acoustic emission examination to detect hidden flaws in the laminate. This method may be used in conjunction with the initial hydrostatic pressure test per 8-700.5.1 and volumetric expansion test per (19)

Copyright ASME International (BPVC)

8-700.5.2 of the vessel, including an autofrettage pressurization.

All analysis shall be done on the waveforms. The waveforms of interest are the *E* (extensional mode) and *F* (flexural mode) plate waves. The velocities of the earliest arriving frequency in the *E* wave and the latest arriving frequency in the *F* wave shall be measured in the circumferential direction in order to characterize the material and set the sample time (the length of the wave window). The *E* and *F* waves must be digitized and stored for analysis. The test pressure shall be recorded simultaneously with the AE events. Permanent storage of the waveforms is required.

All personnel conducting the examination shall be certified per the guidelines of ASNT SNT-TC-1A or CP-189 AE Level II or Level III. A technician performing this test should have training in and experience with measuring the extensional and flexural velocities, C_e and C_f, in composites and identifying wave modes.

(19) **8-600.2.7.2 Test Procedure.** Couple sensors to vessel and connect to the testing equipment per Section V, Article 11. Connect pressure transducer to the recorder. Conduct sensor performance checks prior to test to verify proper operation and good coupling to the vessel. The *E* and *F* waveforms shall be observed by breaking pencil lead at approximately 8 in. (20 cm) and 16 in. (40.6 cm) from a sensor along the fiber direction. All calibration data shall be recorded.

(a) When an autofrettage is not conducted, pressurize vessel to hydrostatic test pressure, hold at test pressure for 5 min beyond the time when no further AE activity is detected, but no more than 30 min, depressurize to design pressure and hold for 10 min to check for leaks per 8-700.5.1. After the leak test, depressurize to 10% of test pressure and hold for a minimum of 2 min, repressurize to 98% of the test pressure and hold for 5 min beyond the time when no further AE activity is detected, but no more than 10 min, and then depressurize to zero pressure. Record events for 2 min at zero pressure and save the data. Then conduct a post-test performance check and save data. The manufacturer shall establish the pressurization rate, and tolerance, in order to adequately characterize the MAE during pressurization. The pressurization rate shall be not lower than 5 psi/sec (34.5 kPa/s) nor higher than 200 psi/sec (1380 kPa/s). Test temperature shall be between 50°F (10°C) and 120°F (49°C).

For the first pressurization during the initial hydrostatic test, use a threshold of 80 dB_{AE} (0 dB = 1 μV at the sensor). The repressurization at 98% of hydrostatic test pressure and load hold shall use a threshold of 60 dB_{AE}. Record waveforms during all pressurizations, pressure holds, and depressurizations. Recording shall be suspended during the time personnel and technicians are in contact with the vessel during the hydraulic expansion test per 8-700.5.2 and the leak test per 8-700.5.8.

(b) When an autofrettage pressurization is conducted, pressurize the vessel to the autofrettage pressure, hold at this pressure for 5 min beyond the time when no further AE activity is detected, but no more than 30 min, then depressurize to the design pressure and hold for 10 min. to check for leaks per 8-700.5.1. After the leak test, depressurize to 10% of the hydrostatic test pressure and hold for 2 min, repressurize to the hydrostatic test pressure and hold for 5 min beyond the time when no further AE activity is detected, but no more than 10 min, then depressurize to zero pressure. Record events for 2 min. at zero pressure and save the data. Then conduct a post-test performance check and save data. The manufacturer shall establish the pressurization rate and tolerance to adequately characterize the MAE during pressurization. The pressurization rate shall be not lower than 5 psi/sec (34.5 kPa/s) nor higher than 200 psi/sec (1380 kPa/s). Test temperature shall be between 50°F (10°C) and 120°F (49°C).

For the first pressurization during the initial autofrettage pressurization, use a threshold of 80 dB_{AE} (0 dB = 1 V at the sensor). The repressurization at the hydrostatic test pressure and load hold shall use a threshold of 50 dB_{AE}. Record waveforms during all pressurizations, pressure holds, and depressurizations. Recording shall be suspended during the time personnel and technicians are in contact with the vessel during the hydraulic expansion test per 8-700.5.2 and the leak test per 8-700.5.8.

(c) Additional Requirements: First and Second Loading

(1) The first loading is defined as the first pressurization of the vessel to a pressure greater than 80% of the required first loading test pressure. A preload is not permitted.

(2) The second loading is defined as the pressurization of the vessel to a pressure greater than 80% of the required section loading test pressure.

(3) The second loading shall follow the first loading without any intermediate loadings. An intermediate loading is defined as any pressurization of the vessel to a pressure greater than 80% of the required second loading test pressure. A second autofrettage loading is not permitted.

(4) Except as noted below, if the first and second loading conditions as defined in (1) and (2) are not met, the vessel shall be considered to have failed the test.

(d) Interruption in Pressurization or Load Hold on First Loading. During the first loading it may be necessary to halt pressurization, if the pressure has not exceeded 80% of the test pressure, a temporary suspension of data acquisition is permissible. The pressure may be reduced or held constant during the pressurization hold. If the pressure has exceeded 80% of test pressure, data acquisition shall not be suspended for more than 15 min. If a longer suspension of data acquisition is required, the vessel shall be unloaded and held for 12 hr or longer

Copyright ASME International (BPVC)

at less than 10% of test pressure. The vessel shall then be retested.

(e) Interruption in Pressurization or Load Hold on Second Loading

(1) During the second loading, data acquisition shall not be suspended for more than 2 min during loading and during the thirty minute pressure hold.

(2) If (1) is violated, the second loading shall be repeated after the vessel has been unloaded and held for 12 hr or longer at 10% or less of the second loading test pressure. This provision applies to all second loading, regardless of whether the first loading is an autofrettage load or the hydrostatic test load.

(3) When an autofrettage load is applied to a vessel, the hydrostatic load is the second loading and under (1) the AE test cannot be suspended. Accordingly, the volumetric expansion test shall be delayed until after the 30 min pressure hold.

(4) The first loading is not as critical as the second loading and it is not necessary to wait until the end of the 30 min hold if the volumetric expansion test is conducted as part of the first loading (autofrettage or hydrostatic).

8-600.2.7.3 Equipment.

8-600.2.7.3.1 Testing System. A testing system shall consist of

(a) sensors
(b) preamplifiers
(c) high pass and low pass filters
(d) amplifier
(e) A/D (analog-to-digital) converters
(f) a computer program for the collection of data
(g) computer and monitor for the display of data
(h) a computer program for analysis of data

Examination of the waveforms event by event must always be possible and the waveforms for each event must correspond precisely with the pressure and time data during the test. The computer program shall be capable of detecting the first arrival channel. This is critical to the acceptance criteria below.

Sensors and recording equipment shall be checked for a current calibration sticker or a current certificate of calibration.

(19) **8-600.2.7.3.2 Sensor and Sensor Calibration.** Calibration shall be in volts/meter of displacement over a specified frequency range. This shall be done by the manufacturer with a Michelson interferometer setup such as that used at National Institute of Standards and Technology. Sensors shall have at least 100 V/μm sensitivity over about 300 kHz bandwidth.

Sensors shall be placed at equal distances around the circumference of the cylinder on its cylindrical portion adjacent to the tangent point of the dome such that the distance between sensors does not exceed 24 in. (0.61 m). Adjacent rings of sensors shall be offset by half a cycle. For example, if the first ring of sensors is placed at 0 deg, 120 deg, and 240 deg, the second ring of sensors is placed at 60 deg, 180 deg, and 300 deg. This pattern shall be continued along the length of the cylinder at evenly spaced intervals until the other end of the cylinder is reached. However, if the attenuation is measured, it is permitted to increase the distance between the sensors by using the attenuation method.

Attenuation is usually largest across the hoop fibers and smallest along the hoop fibers. Two attenuation distances shall be measured, one for the axial direction distance, d_a, and one for the circumferential direction distance, d_c, on the type of composite cylinder to be tested. Attenuation distance in each direction shall be measured by determining the maximum straight-line distance at which the 400 kHz component of either the extensional or flexural wave produced by a suitable source such as an ultrasonic pulser, can be observed with a signal-to-noise ratio of at least 1.4. The positioning between corresponding sensor positions shall not exceed $2 \times d_a$ in the axial direction and $2 \times d_c$ in the circumferential direction.

For smaller cylinders, a minimum of two sensors shall be used for each cylinder, with a sensor installed at each end. The sensor shall be located on the cylindrical section within 2 in. (50 mm) from the dome-to-shell transition area.

8-600.2.7.3.3 Preamplifiers and Amplifiers. See ASME Section V, Article 11.

8-600.2.7.3.4 Filters. A high pass filter of 5 kHz shall be used. A low pass filter shall be applied to prevent digital aliasing that occurs if frequencies higher than the Nyquist frequency (half the Sampling Rate) are in the signal.

8-600.2.7.3.5 A/D. The sampling speed and memory depth (wave window length) are dictated by the test requirements and calculated as follows:

$$\text{vessel length} = L \text{ in. (m)}$$

Use C_E = 0.2 in./μs (5 080 m/s) and C_F = 0.05 in./μs (1 270 m/s), the speeds of the first arriving frequency in the E wave and last arriving frequency in the F wave, respectively, as a guide. The actual dispersion curves for the material shall be used if available.

$L/C_E = T1$ μs is when the first part of the direct E wave will arrive.

$L/C_F = T2$ μs is when the last part of the direct F wave will arrive.

$(T2 - T1) \times 1.5$ is the minimum waveform window time and allows for pretrigger time.

The recording shall be quiescent before front end of the E wave arrives. This is called a "clean front end." "Clean" is defined in 8-600.2.7.4.2(b) below.

The sampling rate, or sampling speed, shall be such that aliasing does not occur.

Copyright ASME International (BPVC)

8-600.2.7.4 Analysis.

8-600.2.7.4.1 Theory of AE Monitoring of High Pressure Composite Pressure Vessels. A stable vessel will exhibit cumulative curves with exponentially decaying curvature. The shape of the cumulative events curve is similar for pressure vessels made of fiberglass, aramid, and carbon fiber that exhibit a fiber dominated failure mode. This is essentially a shakedown test that demonstrates the composite is not progressing to failure at the hold pressure.

8-600.2.7.4.2 Analysis Procedure. Data will include matrix splits, matrix cracks, fiber breaks, and matrix chirps due to fracture surface fretting, and fiber/matrix debonding.

(a) Filter data to eliminate any external noise such as electromagnetic interference (EMI), mechanical rubbing, flow noise, etc. Identify noise events by their shape, spectral characteristics, or other information known about the test such as a temporally associated disturbance due to the pressurization system or test fixturing. EMI is characterized by a lack of any mechanical wave propagation characteristics, particularly a lack of dispersion being apparent. EMI can be further identified by simultaneity of arrival on more than one channel. The two criteria shall be considered together to ensure it is not simply an event that happened to be centered between the sensors. Mechanical rubbing frequencies are usually very low and can be determined by experiment. There should be no flow noise. If the vessel, or a fitting, leaks, this will compromise the data as AE is very sensitive to leaks. Leak noise is characterized by waves that look uniform across the entire length of the waveform window. If a leak occurs during the load hold, the test must be redone. Flow noise is characterized by waves that fill the waveform window. It can be filtered out by setting a pre-trigger/post-trigger energy ratio.

(b) Use only events that have clean front ends (defined above in 8-600.2.7.3.5) and in which first arrival channel can be determined. Clean means having a pre-trigger energy of less than 0.01 $V^2/\mu sec$. Energy is computed by the integral of the voltage squared over time.

(c) Plot first arrival cumulative events versus time. Plots shall always show the pressure data.

(d) Apply exponential fits by channel for pressure hold time and display both data and fit. The values are determined by the fit to

$$y = Ae^{Bt} + C$$

The B value is the shape factor of the cumulative curves. C is an intercept and A is a scale factor. The time t shall be equal intervals during the hold with events binned by time interval. Record exponents and goodness of fit (R^2). Plot energy decay curves. One-third or one-fourth of hold time shall be used for event energy binning (cumulative energy). The equation is

$$y = Ae^{Bt}$$

The sequence of energy values must monotonically decrease. This is similar to using other energy criteria, such as Historic Index. A sequence that is not properly decreasing will be indicated by a low R^2 value.

(e) Save all plots (all channels) to report document.

(f) Repeat plots for second pressure hold and save to report document.

(g) Record exponents and R^2 values.

(h) Vessel B values shall be tracked and compiled in order to develop a statistically significant database.

(1) B is the critical value that measures the frequency of occurrence of events during pressure hold.

(2) Not every vessel will have the exact same B value.

(3) Data on B values should cluster.

8-600.2.7.5 Acceptance Criteria. The qualification vessel provides the initial B values for events and energy from the load hold data from the initial pressurization and the repressurization, if the vessel burst pressure is satisfactory. The criteria are as follows: (19)

Criterion	Pass
Cumulative Event Decay Rate	$-0.1 < B < -0.0001$, $R^2 \geq 0.80$
Cumulative Energy Decay Rate	$-0.2 < B < -0.0001$, $R^2 \geq 0.80$

If these criteria are not met, the vessel does not pass. The vessel may be retested. An AE Level III technician must review the data from the initial testing and the subsequent loading test before the vessel can be passed. Retest loadings shall follow the original pressurization rates and pressures and use a threshold of 60 dB_{AE}. If the vessel fails the criteria again, the vessel shall not be certified by the Inspector as meeting the provisions of this Section.

8-700 TESTING

The Fabricator completing a Class III vessel or vessel part shall be responsible for conducting the tests required by this Appendix.

8-700.1 Production Testing Requirements. Each Class III vessel shall be subjected to the tests required by this paragraph and shall conform to the specified requirements, with results recorded on Production Test Reports. The Class III vessel Production Test Report shall become part of the Fabricator's Construction Records.

A hydraulic pressure test and a hydraulic volumetric expansion test as defined in 8-700.5.1 and 8-700.5.2 shall be performed on each vessel. Both tests may be performed during one pressurization cycle of the vessel. An acoustic emission examination per 8-600.2.7 shall be done during the hydraulic pressure test and subsequent repressurization. During the time the hydraulic volumetric expansion test is performed during the initial pressurization, the AE examination shall be suspended due to personnel coming into

Copyright ASME International (BPVC)

contact with the vessel during the required measurements.

8-700.2 Qualification Testing.

(19) **8-700.2.1 General Requirements.**

(a) It shall be the Fabricator's responsibility to qualify the Class III vessel design. The vessels shall be fabricated per the requirements of the Manufacturing Specification and the design.

(b) The results of the testing and examinations required in this paragraph shall be documented in the Qualification Test Report. The Qualification Test Report shall be prepared and certified by the Fabricator and accepted by the Inspector. The results of these tests shall be documented on Form CPV-2 and together with all test documents shall be designated the Qualification Test Report and shall be included in the Fabricator's Construction Records.

(c) The Class III vessel subject to these tests and examinations shall be designated as "Class III Hydrogen Prototype Vessels." Class III Prototype Vessels that are used for qualification testing shall meet all the requirements of this Case but shall not be Code stamped. For new designs, a sufficient number of prototype vessels shall be fabricated to complete the qualification testing. For Class III vessels with allowable design variant to the original design, as provided in Table 8-700.2.1-1, a reduced number of qualification tests as outlined in Table 8-700.2.1-1 are acceptable for vessel qualification with the Inspector's approval. For design variations in diameter and design pressure, the wall thickness must be scaled in proportion to the diameter and pressure change increase to achieve a stress ratio equal to or less than the original design.

(d) Each Class III Prototype Vessel used for qualification testing shall be fabricated and examined in accordance with the Manufacturing Specification, the design, and the additional specific requirements below, and the results shall be documented in the Qualification Test Report. The Class III vessel used for qualification testing shall not have a protective layer.

8-700.2.2 Specific Requirements.

(a) Weight of Resin and Fiber. The percentage by weight of resin and fiber in each Class III Prototype Vessel shall be determined. The weight of resin and fiber may be determined by calculation following the measurement of the laminate and used fiber weights or by means of an ignition test using ASTM D2584 or ASTM D3171 on a sample taken from an undamaged portion of the CPV used for qualification testing.

(b) Imperfections in the Laminate. Each prototype Class III vessel shall be visually checked for imperfections in the laminate. Classification and acceptance level of imperfections shall be according to Table 8-600.2.1-1 or Table 8-600.2.1-2.

(c) Resin Cure. The resin cure shall be determined on a sample taken from an undamaged portion of the Class III vessel used for qualification testing. The resin cure may be verified by a glass transition test using differential scanning calorimetry or dynamic mechanical analysis.

8-700.3 Production Testing of Completed Vessel. The Fabricator shall, as a minimum, burst test the first Class III vessel in accordance with 8-700.5.3 from each production run of the same geometry. The vessel used for production testing shall not have a protective layer.

One vessel per every 200 finished vessels shall be subjected to a burst test in accordance with 8-700.5.3. The Fabricator, as a minimum, shall burst test one vessel per year in accordance with 8-700.5.3 if production rates are less then 200 vessels per year.

One vessel per every 200 finished vessels shall be subjected to a fatigue test to the requirements of 8-700.5.4. All pressure cycles may be at ambient temperature for the production testing. The Fabricator, as a minimum, shall fatigue test one vessel per year in accordance with 8-700.5.4 if production rates are less then 200 vessels per year.

8-700.4 Failure of Production Tests. In the event of failure to meet test requirements during a production run, an investigation into the cause of failure and retesting shall be carried out.

If there is evidence of a fault in carrying out a test, or an error of measurement, a second test shall be performed on a vessel selected at random from the production run. If the results of this test are satisfactory, the first test shall be ignored.

If the test has been carried out in a satisfactory manner, the cause of failure shall be identified and the vessel Fabricator shall take corrective action, up to removal from service, of all vessels manufactured since the previous production test.

8-700.5 Qualification and Production Tests.

8-700.5.1 Hydraulic Proof Pressure Test.

8-700.5.1.1 Procedure. This test requires that the hydraulic pressure in the vessel be increased gradually and regularly to 1.25 times design pressure. The vessel test pressure shall be held for 30 min followed by a reduction to the design pressure and held for 10 min to ascertain that there are no leaks and no failure. If leakage occurs in the piping or fittings, the vessels may be retested after repair of such leakages.

8-700.5.1.2 Criteria. The vessel shall be rejected if there are leaks, failure to hold pressure, or visible permanent deformation after the vessel is depressurized.

Copyright ASME International (BPVC)

Copyright ASME International (BPVC)
Provided by IHS under license with ASME
No reproduction or networking permitted without license from IHS

(19)

Table 8-700.2.1-1
Qualification Tests

			Design Variant Changes										
				Diameter				Design Pressure					
	Test	New Design	Length [Note (1)]	≤20% [Note (1)]	>20% ≤50%	Liner Thickness or Manufacture	Equivalent Fiber [Note (2)]	≤20% [Note (1)]	>20% ≤60%	Composite Thickness or Pattern	Nozzle	Equivalent Matrix [Note (3)]	Threads
8-700.5.1	Hydraulic pressure [Note (4)]	X	X	X	X	X	X	X	X	X	X	X	
8-700.5.2	Hydraulic expansion [Note (4)]	X	X	X	X	X	X	X	X	X	X	X	
8-700.5.3	CPV burst	X	X	X	X	L	X	X	X	X	X	X	
8-700.5.4	Fatigue	X	X	X	X	X	X	X	X	X	X [Note (5)]		
8-700.5.5	Creep [Note (6)]	X			X					X [Note (7)]			
8-700.5.6	Flaw	X			X	L				X [Note (7)]			
8-700.5.7	Permeability	X			X	X							
8-700.5.9	Torque [Note (9)]	X									X [Note (8)]		X
8-700.5.10	Penetration	X			X	L	X		X				
8-700.5.11	Environmental	X											

Legend:
(*X*) = Tests required for nonload-sharing and load-sharing liners.
(*L*) = Test required for load-sharing liners only.

NOTES:
(1) These tests may be performed with one prototype vessel.
(2) Fiber manufactured from the same nominal raw materials, using the same process of manufacture and having the same physical structure and the same nominal physical properties, and where the average tensile strength and modulus is within ±5% of the fiber properties in an approved vessel design.
(3) Matrix material (i.e., resin, curing agent) are different but are chemically equivalent to the original.
(4) The acoustic emission examination per 8-600.2.7 shall be performed during the hydraulic pressure test and hydraulic expansion test, and any autofrettage procedure.
(5) Required if nozzle/liner interface changes.
(6) Leak test per 8-700.5.8 and burst test per 8-700.5.3 shall follow creep test.
(7) Not required for wind pattern changes.
(8) Required if nozzle/liner/composite interface changes.
(9) The torque test is not required for CPVs having a seamless metallic liner and port openings with straight threads.

Licensee=Khalda Petroleum/5986215001, User=Amer, Mohamed
Not for Resale, 07/02/2019 13:56:36 MDT

8-700.5.2 Hydraulic Volumetric Expansion Test.

8-700.5.2.1 Procedure. This test requires that the hydraulic pressure in the vessel increase gradually and regularly to 1.25 times design pressure. The elastic expansion shall be measured between 10% of the test pressure and the full test pressure and recorded.

8-700.5.2.2 Criteria.

(a) For qualification testing, the vessel shall be rejected if it shows an elastic expansion in excess of 110% of the elastic expansion for the most recent qualification burst test.

(b) For production testing, the vessel shall be rejected if it shows an elastic expansion in excess of 110% of the elastic expansion for the most recent production burst test.

8-700.5.3 Burst Test.

(19) **8-700.5.3.1 Procedure.** Three vessels shall be tested hydraulically, to destruction, by pressurizing at a rate of no more than 200 psi/sec (14 bar/s). If the pressurization rate exceeds 50 psi/sec (3.5 bar/s) at pressures above 80% of the design burst, either the vessel shall be located between the pressure source and the pressure measurement device, or the test pressure shall be held at the vessel's design burst pressure for 5 sec prior to resuming the test. The test shall be carried out under ambient conditions. Prior to the commencement of the test, it is recommended that no air is trapped within the system.

8-700.5.3.2 Parameters to Monitor and Record.

(a) burst pressure
(b) pressure/time curve

8-700.5.3.3 Criteria. The burst pressure or pressure at failure shall be not less than
(a) 3.5 × Design Pressure: Glass Fiber
(b) 2.25 × Design Pressure: Carbon Fiber

8-700.5.4 Fatigue Test.

(19) **8-700.5.4.1 Procedure.** Multiple vessels shall be subjected to a hydraulic pressure cycle test between no greater than 10% of design pressure to the design pressure for N pressure cycles as defined below.

If a minimum operating pressure is specified in the User Design Specification (UDS) that is greater than 10% of the design pressure for all or part of the cycles, the vessels may be cycled between the minimum operating pressure and the design pressure for that portion of the required number of cycles. The number of full-range cycles specified in the UDS shall also be addressed, with pressure cycling between 10% of design pressure and the design pressure conducted accordingly. The minimum operating pressure shall be included on the nameplate in accordance with Part RS.

The total number of required test cycles is a function of the number of tests. The frequency of reversals shall not exceed 0.25 Hz (15 cycles/min). The temperature on the outside surface of the vessel shall not exceed 120°F (50°C) during the test. It is recommended that no air be trapped within the system prior to the commencement of the test. As a minimum, 10% of the cycles, to a limit of 5000 cycles, shall be performed at the minimum design temperature and the remaining cycles may be at ambient conditions.

N = required test cycles
= K_n × service life × C
where
C = required cycles per year as defined in the UDS
K_n = fatigue design margin (minimum value = 2.6)
n = number of fatigue test (minimum value = 2.0)

n	K_n
2	4
3	3.5
4	3
5	2.6

8-700.5.4.2 Parameters to Monitor and Record.

(a) temperature of the vessel
(b) number of cycles achieving upper cyclic pressure
(c) minimum and maximum cyclic pressures
(d) cycle frequency
(e) test medium used
(f) mode of failure, if appropriate

8-700.5.4.3 Criteria. The vessel shall withstand N (19) pressurization cycles to design pressure without failure by burst or leakage.

8-700.5.5 Temperature Creep Test

8-700.5.5.1 Procedure. Two vessels shall be hydraulically pressurized to 1.25 times Design Pressure and shall be maintained at this pressure for 2,000 hr. The test shall be conducted at 185°F (85°C) of the vessel and a relative humidity of less than 50%. After this test, the vessels shall be subjected to the leak test in accordance with 8-700.5.8 and the burst test in accordance with 8-700.5.3. This test may be conducted on a subscale vessel that is the same diameter and wall construction, but shorter in length. A minimum length to diameter ratio of 2:1 shall be used for the subscale vessel.

8-700.5.5.2 Parameters to Monitor and Record.

(a) measurement of the water capacity before and after testing

Copyright ASME International (BPVC)

(b) temperature and relative humidity at least twice a day
(c) vessel pressure at least twice a day

8-700.5.5.3 Criteria.

(a) The vessel shall not exhibit any visible deformation or loose fibers (unraveling).
(b) The vessel shall satisfy the criteria of the Leak Test and the Burst Test.

8-700.5.6 Flaw Test

8-700.5.6.1 Procedure. Two vessels shall be tested in accordance with the following procedure:
(a) One longitudinal flaw is cut into each vessel, in the mid-length of the cylindrical wall of the vessel. The flaw shall be made with a 0.039 in. (1 mm) thick cutter to a depth equal to at least 0.050 in. (1.27 mm) or as defined in the Manufacturing Specification of the composite thickness and to a length between the centers of the cutter equal to five times the composite thickness.
(b) A second transverse flaw of the same dimensions is cut into each vessel in the midlength of the cylindrical wall approximately 120 deg around the circumference from the other flaw.
(c) One vessel shall be subjected to the burst test specified in 8-700.5.3.
(d) The other vessel shall be subjected to the fatigue test specified and the test shall be suspended after 5,000 cycles if the vessel has not failed.
(e) This test may be conducted on a subscale vessel that is the same diameter and wall construction, but shorter in length. A minimum length to diameter ratio of 2:1 shall be used for the subscale vessel.

8-700.5.6.2 Parameters to Monitor and Record.

(a) dimensions of flaws
(b) temperature of the vessel
(c) number of cycles achieving upper cyclic pressure
(d) minimum and maximum cyclic pressures
(e) cycle frequency
(f) test medium used
(g) mode of failure, if appropriate

8-700.5.6.3 Criteria.

(a) First vessel: burst pressure shall be equal to or greater than 2 × Design Pressure.
(b) Second vessel: the vessel shall withstand at least 1,000 pressure cycles to the Design Pressure without leakage. If the vessel fails by leakage after 1,000 cycles, it shall be deemed to have passed the test. However, should failure during this second half of the test be by burst, then the vessel shall have failed the test.

8-700.5.7 Permeability Test.

8-700.5.7.1 General. This test is only required for Class III vessels with nonmetallic liners or welded metallic liners.

8-700.5.7.2 Procedure. (19)

(a) One vessel shall be preconditioned with the boss subjected to twice the installation torque specified for the fittings. The container shall then be filled with the 5% hydrogen/95% nitrogen mixture to the design pressure, placed in an enclosed sealed container at ambient temperature, and monitored for 500 hr to establish a steady state permeation rate. Acceptable test methods include the use of mass spectrometer testing, or other appropriate methods accepted by the Inspector.
(b) Alternatively, a vessel used to contain a fluid other than hydrogen may be tested for permeation using the fluid to be contained, or by using an alternate fluid with adjustment in rate made by considering relative molecular weight or by using relative viscosity, as appropriate.

8-700.5.7.3 Parameters to Monitor and Record. Environmental temperatures at least twice a day.

8-700.5.7.4 Criteria. (19)

(a) The steady-state permeation rate for hydrogen from this mixture shall be less than 0.15 standard cc per hour per liter water capacity of the vessel.
(b) The steady-state permeation rate for methane or natural gas shall be less than 1.0 standard cc per hour per liter water capacity of the vessel.
(c) If a vessel is tested with a fluid to be contained other than hydrogen, methane, or natural gas, the allowable permeation rate shall be established in the User Design Specification and reported in the remarks section of the Fabricator's Data Report. The rate established in the User Design Specification shall take into account the location of the vessel, and ensure that no unsafe condition would result from the permeation.

8-700.5.8 Leak Test.

8-700.5.8.1 Procedure.

(a) Leak testing shall be conducted on the completed vessel.
(b) Acceptable methods for leakage testing include, but are not limited to, bubble testing using dry air or gas or measurement of trace gases using a mass spectrometer.
(c) Leak testing of completed vessels shall be performed at the design pressure.

8-700.5.8.2 Criteria. No leakage in excess of the permeation rate specified in 8-700.5.7 shall be permitted.

Copyright ASME International (BPVC)

8-700.5.9 Torque Test on Vessel Nozzle Neck.

8-700.5.9.1 Procedure.

(a) The body of the vessel shall be held in such a manner as to prevent it from rotating except where the Fabricator specifies that the vessel is to be held by the neck for valve insertion. In this case, the Fabricator's directions shall be used.

(b) The vessel shall be fitted with a corresponding valve and tightened to 150% of the maximum torque recommended by the Fabricator.

(c) The valve shall be removed after the first installation and the neck thread and boss inspected. The valve shall then be reinstalled as specified above.

(d) A test for leaks (bubble test) in the vessel neck area or the permeability test in 8-700.5.7 shall be conducted.

(e) A test for leaks (bubble test) shall be conducted as follows:

(1) pressurize the vessel to the design pressure with air or nitrogen

(2) maintain pressure in the vessel at the design pressure for no less than 2 hr

(3) conduct a bubble leak test for at least 10 min

(f) This test may be conducted on a subscale vessel that is the same diameter and wall construction, but shorter in length. A minimum length to diameter ratio of 2:1 shall be used for the subscale vessel.

8-700.5.9.2 Parameters to Monitor and Record.

(a) type of valve/plug material
(b) valving procedure
(c) applied torque

8-700.5.9.3 Criteria.

(a) The neck thread and boss shall show no significant deformation and shall remain within drawing and gauge tolerance.

(b) Leakage greater than 1 bubble/2 min in the bubble leak test or failure of the permeability test described in 8-700.5.7 shall constitute a failure of the test.

8-700.5.10 Penetration Test.

8-700.5.10.1 Procedure. A vessel pressurized to design pressure with nitrogen or the contained gas shall be penetrated by an armor piercing bullet with a diameter of 0.3 in. (7.62 mm) or greater. The projectile shall impact the sidewall at an approximate angle of 45 deg. Full penetration of the sidewall is not required. This test may be conducted on a subscale vessel that is the same diameter and wall construction, but shorter in length. A minimum length to diameter ratio of 2:1 shall be used for the subscale vessel.

8-700.5.10.2 Criteria. The cylinder shall not rupture.

8-700.5.11 Environmental Test.

8-700.5.11.1 Procedure. (19)

(a) One vessel shall be tested, including coating and protective layer if applicable. The upper section of the vessel is to be divided into five distinct areas and marked for pendulum impact preconditioning and fluid exposure as shown in Figure 8-700.5.11.1-1. The areas shall be nominally 4 in. (100 mm) in diameter. While convenient for testing, the areas need not be oriented along a single line but shall not overlap.

(b) Although preconditioning and other fluid exposure is performed on the cylindrical section of the vessel, all of the vessel should be as resistant to the exposure environments as the exposed areas.

(c) The impact body of the pendulum shall be of steel and have the shape of a pyramid with equilateral triangle faces and a square base, the summit and the edges being rounded to a radius of 0.12 in. (3 mm). The center of percussion of the pendulum shall coincide with the center of gravity of the pyramid, its distance from the axis of rotation of the pendulum shall be 39.37 in. (1 m). The total mass of the pendulum referred to, its center of percussion shall be 33 lb (15 kg). The energy of the pendulum at the moment of impact shall be not less than 22.1 ft-lb (30 N·m) and as close to that value as possible.

(d) During pendulum impact, the vessel shall be held in position by the end bosses or by the intended mounting brackets. Each of the five areas identified in Figure 8-700.5.11.1-1 shall be preconditioned by impact of the pendulum body summit at the center of the area. The container shall be unpressurized during preconditioning.

(e) Each marked area is to be exposed to one of five solutions. The five solutions are

(1) sulfuric acid — 19% solution by volume in water

(2) sodium hydroxide — 25% solution by weight in water

(3) methanol/gasoline — 5%/95% concentration of M5 fuel meeting the requirements of ASTM D4814, Automotive Spark-Ignition Engine Fuel

(4) ammonium nitrate—28% by weight in water

(5) windshield washer fluid (50% by volume solution of methyl alcohol and water)

(f) When exposed, the test sample will be oriented with the exposure area uppermost. A pad of glass wool approximately $\frac{1}{64}$ in. (0.5 mm) thick and between 3.5 in. and 4.0 in. (90 mm and 100 mm) in diameter is to be placed on the exposure area. Apply an amount of the test fluid to the glass wool sufficient to ensure that the pad is wetted evenly across its surface and through its thickness for the duration of the test, and to ensure that the concentration of the fluid is not changed significantly during the duration of the test.

Copyright ASME International (BPVC)

Figure 8-700.5.11.1-1
Pendulum Impact Test

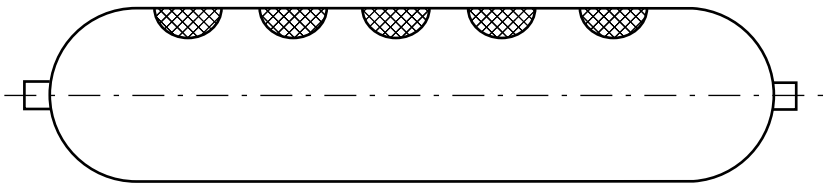

(g) Vessels shall be hydraulically pressure cycled between less than or equal to 10% of design pressure and 125% of design pressure for a total of 3,000 cycles. The maximum pressurization rate shall be 400 psi (2.75 MPa) per second. After pressure cycling, vessels shall be pressurized to 125% of design pressure, and held at that pressure until the elapsed exposure time (pressure cycling and pressure hold) to the environmental fluids equals 48 hr.

(h) This test may be conducted on a subscale vessel that uses the same materials and is tested to the same stress levels as the Class III Prototype Vessels.

8-700.5.11.2 Criteria. Vessels shall not leak or rupture during the test.

8-800 STAMPING AND NAMEPLATES

8-800.1 Stamping Requirements. Stamping requirements are as follows:

(a) The year of vessel expiration shall be shown on the Fabricator's Data Report and the vessel nameplate.

(b) The nameplate shall be marked per Part RS of Section X with "RP Class III" designating Section X, Class III construction type.

(c) Nameplates may be attached to the composite reinforcement portion of the vessel. Nameplates attached to the composite reinforcement portion of the vessel shall be attached in accordance with the requirements of RS-130.

8-900 QUALITY PROGRAM

8-900.1 Fabricator's Certifications.

(a) The Fabricator shall prepare, implement, and use a quality program that includes the specific technical issues related to the manufacture of Class III vessels. The level of detail shall be sufficient to satisfy all requirements listed in Mandatory Appendix 1.

(b) The Fabricator shall be accredited to apply the ASME Certification Mark with RP Designator (Section X).

8-900.2 Records. The Fabricator's Construction Records supplied to the User shall also include

(a) material supplier's certifications and specification sheets for resin, fiber reinforcement, promoters, catalyst, and other components used in laminate construction

(b) the records of the laminate material tests

8-900.3 Report Forms.

(a) a Fabricator's Data Report shall be completed for each Class III vessel constructed under this Appendix on Form CPV-1, instead of Form RP-1, and shall be signed by the Fabricator and the Authorized Inspector. A sample Form CPV-1 and instructions for completing the form are included in the Forms section.

(b) a Qualification Test Report Form CPV-2 shall be used for the record of qualification (or requalification) for the laminate design and Laminate Procedure Specification as part of the Qualification Test Report.

(c) the latest applicable Qualification Test Report shall be referenced on the Data Report and Form CPV-1 for each Class III vessel constructed per this Appendix.

8-1000 RETENTION OF DATA REPORTS

The Fabricator shall keep a copy of the Fabricator's Data Report until the date of expiration of the Class III vessel or register the vessel with the National Board of Boiler and Pressure Vessel Inspectors, 1055 Crupper Avenue, Columbus, Ohio 43229. See RS-302.

Copyright ASME International (BPVC)

FORM CPV-1
FABRICATOR'S DATA REPORT FOR COMPOSITE REINFORCED PRESSURE VESSELS (CLASS III)
(Revision A — 2017)
As Required by the Provisions of the ASME Boiler and Pressure Vessel Code

1. Fabricated and Certified by ① (Name and Address of Fabricator)
2. Fabricated for ② (Name and Address of Purchaser)
3. Location Operating ③ (Name and Address)
4. Type ④ (Horiz. or Vertical) ⑤ (Manufacturer's Serial No.) ⑥ (CRN) ⑦ (National Board No.) (Year Built)
   Drawing No. ⑧ Prepared by ⑨
5. User's Design Specification No. ⑩ Date
6. Procedure Specification No. ⑪ Date
7. Qualification Report No. ⑫ Date Latest Requalification Date
8. ASME Section X ⑬ (Edition and Addenda Date, if Applicable) (Code Case No.)
9. Service ⑭
10. Restrictions and Warnings ⑮ ⑯
11. Shell: Construction ⑰
    Size and Configuration ⑱ (ID) ⑲ (Length) ⑳ (Thickness) ㉑ (Shape)
12. Heads : Construction ㉒
    Size and Configuration ㉓ (ID) ㉔ (Attachment) ㉕ (Thickness) ㉖ (Shape)
13. Liner Construction, Thickness and Material ㉗
14. Fabrication for MAWP ㉘ psi (kPa) at Maximum Allowable Temperature ㉘ °F (°C)
15. Minimum Allowable Temperature ㉙ °F (°C) at ㉙ psi (kPa)
16. Test Pressure ㉚ psi (kPa) ㉚ (Hydro./Pneum./Combination) at ㉚ °F (°C)
17. Performed in the ㉛ (Horizontal/Vertical) position using ㉛ (Fluid(s) Used in the Test)
18. Connections or Provisions for Overpressure Relief ㉜
19. Supports and Attachments ㉝

(07/17)

Copyright ASME International (BPVC)

FORM CPV-1 (Back)
(Revision A — 2017)

20. Reinforcement Type and Resin for Structural Laminate ⑭

21. Barcol Hardness ⑮

22. Nozzles ⑯

Purpose	Size	Type	Material	Thickness	Reinforcement Material	How Attached

23. Manufacturer's Partial Data Reports, properly identified and signed by commissioned inspectors, have been furnished for the following components ⑰

24. Remarks ⑱

25. Year of Expiration of Vessel ⑲

CERTIFICATE OF SHOP COMPLIANCE

We certify that the statements in this Data Report to be correct and that all details of design, material, construction, and workmanship of this vessel conform to the ASME BOILER AND PRESSURE VESSEL CODE, Section X.

RP Certification of Authorization No. _____ Expires _____ (Date) , _____

Date _____ Co. Name ⑳ (Fabricator) Signed ⑳ (Authorized Representative)

CERTIFICATE OF SHOP INSPECTION

I, the undersigned, holding a valid commission issued by the National Board of Boiler and Pressure Vessel Inspectors and/or the State or Province of _____ and employed by

_____

of _____, have inspected the vessel described in this Fabricator's Data Report on _____ , _____ , and state that, to the best of my knowledge and belief, the Manufacturer has constructed this part in accordance with the ASME BOILER AND PRESSURE VESSEL CODE, Section X, Class III. By signing this certificate, neither this inspector nor his employer makes any warranty, expressed or implied, concerning the part described in this Fabricator's Data Report. Furthermore, neither the Inspector nor his employer shall be liable in any manner for any personal injury or property damage or a loss of any kind arising from or connected with this inspection.

Date _____ Signed ㉑ (Authorized Inspector)

Commissions ㉒ (National Board Authorized Inspector Number)

(07/17)

Copyright ASME International (BPVC)

Table 8-900.3-1
Guide for Completing Fabricator's Data Report CPV-1

Reference to Circled Numbers in the Form	Description
(1)	Name and street address of Fabricator (i.e., maker of all components not covered by Partial Data Reports).
(2)	Name and address of Purchaser and/or Owner.
(3)	Name and street address of USER, where the vessel is to be installed. If not known, so indicate: e.g., not known—built for stock.
(4)	Type of vessel, such as vertical or horizontal vessel, including method of support.
(5)	Fabricator's serial number (one vessel on one report).
(6)	Canadian registration number where applicable.
(7)	Where applicable, National Board Number from Fabricator's Series of National Board Numbers. National Board Number shall not be used for owner-inspected vessels.
(8)	Indicate drawing numbers, including revision numbers, which cover general assembly and list of materials. For Canadian registration, also include the number of the drawing approved by Provincial authorities.
(9)	Organization that prepared the drawing.
(10)	To be completed by the Fabricator to show the number of the User's Design Specification.
(11)	To be completed by the Fabricator to show the number of the laminate procedure qualification.
(12)	To be completed by the Fabricator to show the number and date for the qualification test record for the vessel and date of any requalification.
(13)	ASME Code, Section X, Edition (e.g., 2007) and Addenda (e.g., A09, A10, etc., if applicable) used for fabrication.
(14)	Describe contents or service of the vessel.
(15)	Additional comments, including any Code restrictions on the vessel or any unusual Code or jurisdictional requirements that have been met.
(16)	Show need for start-up or shutdown temperature and/or controlled rate of heating or cooling, maximum temperature of any part.
(17)	Specify method of shell laminate application such a filament winding or centrifugal casting.
(18)	State inner diameter of the structural portion of the shell excluding any liner (e.g., liner outer diameter would be the inner diameter of a lined vessel).
(19)	State tangent length of the cylindrical portion of the shell.
(20)	State nominal thickness of the structural portion of the shell excluding any outer protective layer.
(21)	State principal shape of vessel shell such as cylindrical or spherical.
(22)	State the method of head laminate application such as filament winding or resin transfer molding.
(23)	State the inner diameter of the structural portion of the heads excluding any liner.
(24)	Indicate the attachment method for the head to the shell, such as integrally wound.
(25)	State the nominal thickness of the structural portion of the head excluding any outer protective layer.
(26)	State shape of the head such as hemispherical or elliptical.
(27)	State method of construction of the liner such as welded, cast, forged, swaged, thickness, and material of construction.
(28)	State the maximum allowable working pressure at the maximum allowable temperature for which the vessel is constructed and is marked on the nameplate.
(29)	Show minimum allowable temperature at coincident pressure. List if more than one set.
(30)	State the test pressure, type of test such as hydrostatic or pneumatic, test temperature.
(31)	Indicate position of the vessel during the pressure test and test fluid.
(32)	Indicate nozzle or other opening that is designated for pressure relief.
(33)	Indicate provisions for support of the vessel and any attachments for superimposed equipment.
(34)	Indicate reinforcement type such as glass or graphite and manufacturer's resin type and specification.
(35)	Record the average Barcol hardness of the shell and heads.
(36)	Show nozzles by size, type, and purpose.
(37)	List any part such as nozzles for which another manufacturer has furnished partial data reports. Provide the part name, name of the manufacturer, and the serial number of the part.
(38)	Under "Remarks", list any pertinent information not otherwise provided for in the rest of the data report. Information such as outer protective layer type and thickness, and operating and service conditions stated by the purchaser.

Copyright ASME International (BPVC)

Table 8-900.3-1
Guide for Completing Fabricator's Data Report CPV-1 (Cont'd)

Reference to Circled Numbers in the Form	Description
(39)	Indicate the year of expiration for the vessel based on the qualification tests performed on the prototype vessel.
(40)	The Certificate of Compliance block is to show the name of the Fabricator as shown on the ASME Certificate of Authorization. This should be signed by the chief inspector, Manager of Quality Control, or a like person.
(41)	The Certificate of Shop Inspection is to be completed by the Fabricator and signed by the Authorized Inspector who performs the shop inspection.
(42)	The Authorized Inspector's National Board commission number must be shown when the vessel is stamped "National Board", otherwise show only this State or Province commission number.

GENERAL NOTE: Any quantity to which units apply shall be entered on the Fabricator's Data Report with the chosen units.

Copyright ASME International (BPVC)

FORM CPV-2
RECOMMENDED FORM FOR QUALIFYING THE LAMINATE DESIGN AND THE LAMINATE PROCEDURE SPECIFICATION USED IN THE FABRICATION OF COMPOSITE REINFORCED PRESSURE VESSELS (CLASS III)
(Revision A — 2017)
As required by the Provisions of the ASME Boiler and Pressure Vessel Code

Qualification Test Report No. _____

Laminate Procedure Specification No. _____

A change in any of the essential variables denoted by an asterisk below requires a new Laminate Procedure Specification.

*Fiber _____
(Manufacturer and Designation)

*Sizing or Finish _____
(Manufacturer and Designation)

*Resin _____
(Type, Manufacturer, and Designation)

*Curing Agent _____
(Type, Manufacturer, and Designation)

Curing Agent/Resin Ratio _____

Viscosity of Resin System _____ cP (min.) to _____ cP (max.) @ _____ °F (°C)

*Manner of Impregnation _____
(Prepregnation, Wet Wind, Postpregnation)

*Percent Fiber by Weight in Composite _____
[See Note (1)]

*Variables of Winding Process [See Note (2)] _____

Helix Angle _____ (Measured on Cylinder Between Axis and Band Path)

Circumferential Band Density _____ end/in. (mm) _____

Circumferential Band Width _____ in. (mm) _____

Tension: Per Strand (End), Roving, or Band (Specify Which) _____ lb. (kg) per _____

Method of Control _____ Program _____

Layer Sequence _____
[See Note (2)]

*Primer _____
(Type, Manufacturer, and Designation)

Primer Application Method _____

*Primer Curing Schedule _____ °F (°C) for _____ hr _____ min _____

NOTES:
(1) Where a range of values or a tolerance applies, state the applicable range or tolerance.
(2) Use "O" to indicate full layer of circumferential windings (down and back), include number of passes.
Use "o" to indicate half layer of circumferential windings (single pass).

(07/17)

Copyright ASME International (BPVC)

FORM CPV-2 (CONT'D)
(Revision A — 2017)

Exterior Treatment (Non-Structural, Describe) _____

	Fiber Type	Fiber Form	Manufacturer	Manufacturer No.
Material No. 1	_____	_____	_____	_____
Material No. 2	_____	_____	_____	_____

*Inner Liner _____
(Material, Grade, and Thickness [see Note (1)].)

*Liner Size and Configuration _____ (OD) _____ (Length) _____ (Cylindrical, Spherical, Other)

Laminate Strength _____ psi (kPa) Method of Measurement _____ (If Other Than ASTM D 2290)

Interlaminar Shear Strength _____

Acoustic Emission Examination Report Number _____

*Laminate Curing Schedule _____ °F (°C) for _____ hr _____ min _____

_____ °F (°C) for _____ hr _____ min _____

_____ °F (°C) for _____ hr _____ min _____

_____ °F (°C) for _____ hr _____ min _____

_____ °F (°C) for _____ hr _____ min _____

Manner of Measuring Temperature: Oven Air _____ Wrong Surface _____

Vessel Head _____ Other (Describe) _____

*Barcol Hardness _____
(Use a separate sheet to record individual readings and their location [see Note (1)].)

Laminate Thickness _____
(Use a separate sheet to record individual readings and their location [see Note (1)].)

*Volumetric Expansion _____

Gel Time _____ min Peak Exothermic Temperature _____ °F (°C)

Minimum Temperature Cycle Test: _____ (No. of Cycles) from _____ psi (kPa) to _____ psi (kPa) at _____ °F (°C) maximum test temperature

Maximum Temperature Cycle Test: _____ (No. of Cycles) from _____ psi (kPa) to _____ psi (kPa) at _____ °F (°C) minimum test temperature

Burst Pressure _____ psi (kPa) Qualification Pressure _____ psi (kPa)

Mode of Failure _____

(07/17)

Copyright ASME International (BPVC)

FORM CPV-2 (CONT'D)
(Revision A — 2017)

ASME BOILER AND PRESSURE VESSEL CODE, Section X _____ (Year) _____ [Addenda (if applicable) Date] _____ (Case No.)

We certify that the statements in this Specification are correct:

Date _____ , _____ Signed _____ (Fabricator)

By _____

Certificate of Authorization Number _____ Expires _____

CERTIFICATION BY SHOP INSPECTOR OF QUALIFICATION OF LAMINATE DESIGN AND LAMINATE PROCEDURE SPECIFICATION

Laminate Procedure Specification of _____ at _____
For _____ process of fabricating vessel(s) described in User's Design Specification Number _____ and Fabricator's Design Report Number _____
I, the undersigned, holding a valid commission issued by the National Board of Boiler and Pressure Vessel Inspectors and/or the State or Province of _____ and employed by _____ of _____ have inspected the pressure vessel and witnessed tests described in the Qualification Test Report of the Laminate Design and Procedure Specification and state that to the best of knowledge and belief, the Fabricator has constructed this part in accordance with the ASME BOILER AND PRESSURE VESSEL CODE, Section X, Class III and the Laminate Design and Procedure Specification being qualified. By signing this certificate, neither the inspector nor his employer makes any warranty, expressed or implied, concerning the design or procedure covered by this Qualification Test Report. Furthermore, neither the inspector nor his employer shall be liable in any manner for any personal injury or property damage or loss of any kind arising from or connected with this inspection.

Date _____ Signed _____ (Authorized Inspector) Commissions _____ (National Board Authorized Inspector Number)

(07/17)

Copyright ASME International (BPVC)

MANDATORY APPENDIX 9
ESTABLISHING GOVERNING CODE EDITIONS, ADDENDA, AND CASES FOR FRP PRESSURE VESSELS

9-100 GENERAL

After Code revisions are approved by ASME, they may be used beginning with the date of issuance shown on the Code. Except as noted below, revisions become mandatory 6 months after the date of issuance. Code Cases are permissible and may be used beginning with the date of approval by ASME. Only Code Cases that are specifically identified as being applicable to this Section may be used. At the time a Code Case is applied, only the latest revision may be used. Code Cases that have been incorporated into this Section or have been annulled may not be used.

Changes to the Code and Code Cases related to design, material, fabrication, examination, inspection, testing, overpressure protection and field assembly made prior to completion of the pressure vessel or replacement part may be critical to the intended service conditions of the pressure vessel. These changes must be considered by the Fabricator. Application of such changes shall be a matter of agreement between the Fabricator and the user.

As used in this Appendix, the term "Inspector" shall be considered to include "Authorized Inspector," "Qualified Inspector," and "Certified Individual," as applicable.

9-200 DESIGN

The Fabricator of the completed pressure vessel shall establish the Code Edition, Addenda and Code Cases to be used for design of a pressure vessel, including parts thereof, or a replacement part to be stamped with the ASME certification mark required by this Section.

(a) Except as provided in (b) and (c), the Code Edition and Addenda used to design a pressure vessel, parts thereof, and replacement parts shall be either those that are mandatory on the date the vessel or replacement part is contracted, or those that have been approved and issued by ASME prior to the contract date but are not yet mandatory (refer to 9-100 above).

(b) Existing pressure parts that have been stamped and certified to an earlier or later Edition and Addenda than those used for design, and that have never been placed in service, (i.e., placed in stock for future use) may be used provided they are acceptable to the Manufacturer.

(c) It is permitted to provide a replacement part "in kind" (i.e., identical in fit and material to the part being replaced) for an existing pressure vessel and to certify the part as meeting the Code Edition and Addenda to which the existing pressure vessel is certified. The material may be produced in accordance with the material specification revision referenced in the Code Edition and Addenda to which the existing pressure vessel is certified or to any subsequent revision to that material specification.

9-300 MATERIALS

For pressure-containing parts, the Fabricator shall use material conforming to the Procedure Specification meeting the qualification requirements of the Edition and Addenda specified for design.

Also the material specification edition must be listed as approved for use in Section II, Part A, Mandatory Appendix II, Table II-100 or Table II-200; or Section II, Part B, Mandatory Appendix II, Table II-100 or Table II-200.

For replacement parts provided "in kind," the material shall be produced in accordance with the material specification revision listed in Section II as described above at the time the part is certified.

9-400 FABRICATION

The Edition and Addenda used to govern fabrication shall be either those governing design or the Edition and Addenda approved and issued at the time the activity is performed.

9-500 EXAMINATION

Examination refers to activities performed by the Fabricator that include nondestructive examination. The Edition and Addenda used to govern examination shall be either those governing design or the Edition and Addenda approved and issued at the time the activity is performed.

Copyright ASME International (BPVC)

9-600 INSPECTION

Inspection refers to activities performed by the Inspector. The Code Edition and Addenda used to govern inspection shall be the same as those governing design.

9-700 TESTING

The Code Edition and Addenda used to govern testing of the item shall be the same as those governing design.

9-800 OVERPRESSURE PROTECTION

The Code Edition and Addenda used to govern overpressure protection shall be the same as those governing design.

9-900 FIELD ASSEMBLY

The Edition and Addenda used to govern field assembly shall be either those governing design or the Edition and Addenda approved and issued at the time the activity is performed.

9-1000 CERTIFICATION

The Edition and Addenda used to govern Code certification shall be the same as those governing design.

Copyright ASME International (BPVC)

MANDATORY APPENDIX 10
LAMINATES WITH LOAD-SHARING METALLIC SHELLS FOR HIGH PRESSURE SERVICE

10-100 SCOPE

10-101 GENERAL DESCRIPTION

Composite Reinforced Pressure Vessels (CRPVs) are metallic vessels (Section VIII, Division 3) with fiber-reinforced plastic laminate wrapped around the cylindrical shell and are designed to contain fluids at high pressure. A laminate of continuous filaments of a specified glass or carbon fiber with a specified resin system is circumferentially wound on the shell in a systematic manner under controlled tension and cured in place. The heads are not wrapped, and openings are not permitted in the laminate.

Each completed vessel shall comply with the requirements of Section VIII, Division 3, except the laminate shall comply with the requirements of this Appendix.

10-102 GENERAL REQUIREMENTS

This Appendix defines the requirements for the materials, design (composite properties), fabrication, qualification, examination, and testing of laminates to be applied as part of the construction of a Section VIII, Division 3 composite pressure vessel. Design of the vessel, including the laminate, shall be performed by the Section VIII, Division 3 Manufacturer.

10-200 GENERAL REQUIREMENTS

General requirements for the manufacture of CPRVs are specified in 10-201 through 10-203.

10-201 SCOPE

CRPVs consist of a laminate of continuous unidirectional filaments of a specified glass or carbon fiber with a specified resin circumferentially wound in a systematic manner under controlled tension over a cylindrical metallic shell and cured in place. Openings are not permitted in the laminate. Metallic ends and nozzles complete the construction (see Figures 10-201-1, 10-201-2, and 10-201-3).

10-202 PROTECTIVE LAYER

(a) The User's Design Specification shall state if a protective layer for the laminate is needed and, if so, shall specify the performance requirements for that layer. The User's Design Specification shall state if the CRPV will be exposed to sunlight in service. If so, the Manufacturer shall apply a UV barrier coating to the laminate.

(b) In addition to (a), all laminates shall be sealed with a waterproof barrier as required in 10-408.

Figure 10-201-1
General Arrangement

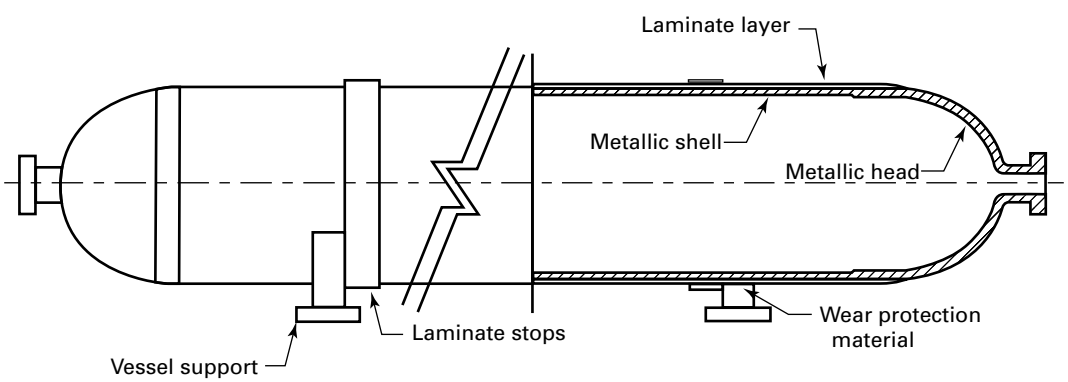

Copyright ASME International (BPVC)

Figure 10-201-2
Laminate Termination

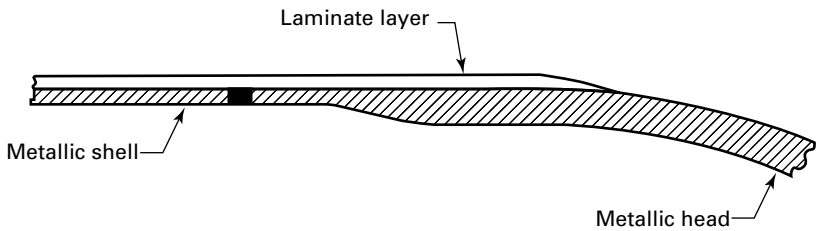

Figure 10-201-3
Laminate Step

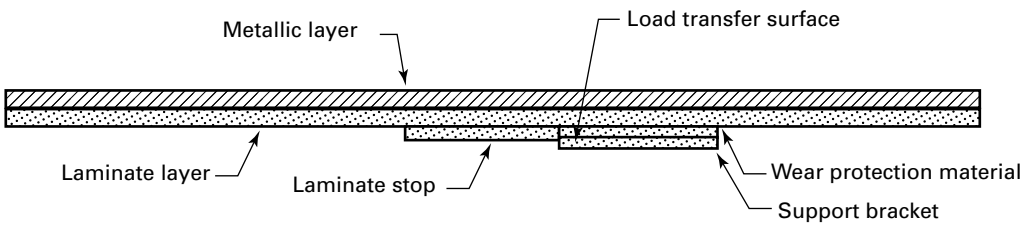

10-203 MANUFACTURER'S RESPONSIBILITIES

(a) The Manufacturer shall be responsible for preparation and qualification of a Laminate Procedure Specification to apply the laminate. The Laminate Procedure Specification shall specify all pertinent material properties data, the means by which the laminate is applied to the metallic shell, and all other significant process data associated with the laminate on the completed CRPV. It shall include tolerance limits for all appropriate material properties; process conditions such as time and temperature; acceptable test result values; and compositions of resins, fibers, and curing agents, etc., as further defined by the rules of this Appendix. It shall make provisions for protection of the structural laminate from damage due to impact; ultraviolet radiation; or other environmental exposure, fire, abrasive conditions, and in-service degradation of the laminate for the life of the CRPV under the service conditions as specified in the User's Design Specification. The Laminate Procedure Specification shall be qualified per the requirements of this Appendix and shall be part of the Manufacturer's Design Report.

(b) It shall be the Manufacturer's responsibility to conduct Laminate Qualification Tests to qualify and requalify the Laminate Procedure Specification per the requirements of this Appendix and to record the result thereof. Using the procedures established in this Appendix, a report of tests contained in 10-600, Laminate Procedure Qualification, shall be prepared and certified by the Manufacturer and the Inspector. The results of these tests shall be documented on Section VIII, Division 3, Form CRPV-2A and, together with all test documents, shall be designated the Qualification Test Report and be included in the Manufacturer's Construction Records.

(c) The Manufacturer shall be responsible for conducting laminate production examinations and tests as required by 10-400. The test results shall be included in the Manufacturer's Construction Records.

10-300 MATERIALS

10-301 GENERAL MATERIALS REQUIREMENTS

(a) Laminates used in the construction of a CRPV shall comply with the requirements listed in 10-302.

(b) All materials used in the manufacture of the laminate shall be traceable to material test reports, or certificates of compliance; shall be traceable to an individual CRPV vessel; and shall be documented in the Manufacturer's Construction Records.

(c) Materials used in fabricating laminates shall be

(1) fibers and a resin system (combined by vessel manufacturer at time of application to the metallic shell).

(2) fibers pre-impregnated with resin by a third party before shipping to vessel manufacturer (prepreg). Only epoxy resin shall be used for fiber pre-impregnation.

Copyright ASME International (BPVC)

10-302 LAMINATES

(a) Fiber-reinforced plastic materials are designated as laminates. These laminates, which are used as the outer structural layer of CRPVs, shall be fabricated in accordance with the requirements of this Appendix.

(b) Laminates are composite structures consisting of glass or carbon fibers embedded in a resin system.

(c) The Manufacturer shall retain the published specifications for all materials used in the laminate of each CRPV, the material supplier's recommendations for storage conditions, shelf life, and the material supplier's certification that each shipment conforms to the published specification requirements. These data shall be part of the Manufacturer's Construction Records.

(d) The maximum design temperature of the laminate shall be the same as the design temperature of the CRPV and shall be specified in the User's Design Specification, but in no case shall it exceed 150°F (66°C).

(e) The laminate minimum design temperature shall not be colder than −65°F (−54°C) (see Section VIII, Division 3, Part KD, KD-1313).

10-303 FIBERS

10-303.1 Glass Fibers

(a) Glass fibers shall be one or more of the following glass compositions:

(1) Type S glass

(2) Type E-CR glass

(b) The material supplier shall certify the fibers conform to the Manufacturer's specifications for the product and that the minimum strength and modulus, measured per ASTM D2343, are not less than the specified minimum values for resin-impregnated strands.

10-303.2 Carbon Fibers

(a) Carbon fibers shall be Polyacrylonitrile (PAN) based carbon fiber tows having mechanical properties meeting the requirements of a procurement document prepared by the Manufacturer.

(b) The material supplier shall certify the fibers conform to the Manufacturer's specifications for the product and that the minimum strength and modulus, measured in accordance with ASTM D4018 or ASTM D2585, are not less than the specified minimum values for resin-impregnated strands.

10-304 FIBER SURFACE TREATMENT

The surface of the fiber shall be treated to provide a bond between the fiber and resin system as needed.

10-305 RESIN SYSTEM

The resin system shall consist of an epoxy, polyester, or vinyl ester plus the resin manufacturer's recommended promoters and curing agents. No filler, pigment, thixotrope, or dye that will interfere with the natural color of the resin shall be used except as permitted by 10-402, Laminate Procedure Specification.

10-305.1 Resin Material Requirements

(a) The resin materials used in the manufacture of laminates shall be the same as the materials specified in the Laminate Procedure Specification. Each resin shall be traceable by the name of its supplier and trade name or number of that supplier. The resin supplier shall furnish the Manufacturer a Certificate of Analysis for each resin. The Certificate of Analysis shall include the following information:

(1) resin identification

(2) batch number(s)

(3) date of manufacture

(4) shelf life

(b) The resin supplier shall certify for each batch the value and limits stipulated in his specification for the properties identified in Table 10-305.1-1. Resin material outside the shelf life shall be either retested by the resin manufacturer and certified to the original properties or rejected.

The Manufacturer shall test each batch of resin for the properties listed in Table 10-305.1-2 to ensure the material characteristics of the resin have not changed from values specified in the Laminate Procedure Specification.

The values obtained for viscosity and specific gravity for resin alone shall be within the limits stated in the supplier's specification for that resin and as listed in the Laminate Procedure Specification. Resin testing shall be performed at first usage and at subsequent intervals of not more than $\frac{1}{4}$ of the resin shelf life. The resin shall be maintained in accordance with the resin manufacturer's recommendations.

The values obtained for gel-time and peak exothermic temperature shall be for a particular resin/curing system test formulation and temperature and shall be within the limits listed in the Laminate Procedure Specification. The test formulation and temperature shall be representative of the formulations used during laminate fabrication. These test results shall be certified by the Manufacturer

Table 10-305.1-1
Resin Supplier Certifications

Resin System	Required Certifications
Polyester/vinyl ester	
Viscosity	ASTM D445 or D2116
Specific gravity	Section X, Mandatory Appendix 5
Epoxy	
Viscosity	ASTM D445 or D2196
Epoxide equivalent	ASTM D1652
Specific gravity	Section X, Mandatory Appendix 5

Copyright ASME International (BPVC)

Table 10-305.1-2
Tests by Laminate Manufacturer

Resin System	Required Tests
Polyester/vinyl ester	
Viscosity	ASTM D445 or D2196
Gel time and peak exothermic temperature	ASTM D2471
Specific gravity	Section X, Mandatory Appendix 5
Epoxy	
Viscosity	ASTM D445 or D2196
Gel time	ASTM D2471
Specific gravity	Section X, Mandatory Appendix 5

and shall be included in the Manufacturer's Construction Records.

(c) The tolerance limits for the test formulation, as defined in the Laminate Procedure Specification, may be established by the resin supplier or the Manufacturer. The tolerance limits shall be established using formulation components having Manufacturer-specified material characteristics. The tolerance limits established shall be within a sufficiently narrow range such that test results outside this range will reflect deviations in component material characteristics and alert the Manufacturer of possible material irregularities.

The Manufacturer shall establish and document a maximum use temperature for the resin/cure system. This may be in conjunction with the resin manufacturer or independent laboratory and may be based on heat distortion temperature or glass transition temperature. The resin maximum use temperature shall be a minimum 35°F (19°C) below the heat distortion temperature, or the glass transition temperature, but shall be equal to higher than the laminate design temperature. The Manufacturer shall re-establish and redocument the maximum use temperature at least every 12 months using current batches of resin and curing agent. The maximum use temperature shall be recorded in the Laminate Procedure Specification. A record of these determinations shall be included in the Manufacturer's Construction Records.

10-306 CURING AGENTS

The curing agents used, the resin-to-curing-agent ratio, and the curing procedure used for laminate fabrication shall be as specified in the Laminate Procedure Specification. Each curing agent shall be traceable by the supplier's name, supplier's designation, and generic name.

10-307 PRE-IMPREGNATED FIBERS

(a) Fibers used for making pre-impregnated fibers shall be one of the fibers listed in 10-303, and the resin shall be limited to epoxy.

(b) Fiber Requirements

(1) The pre-preg supplier shall certify the fibers conform to the Manufacturer's specifications for the product and that the minimum strength and modulus, measured per ASTM D2343, are not less than the specified minimum values for resin-impregnated strands.

(2) Carbon fibers shall be Polyacrylonitrile (PAN) based carbon fiber tows having mechanical properties meeting the requirements of a procurement document prepared by the Manufacturer.

(3) The pre-preg supplier shall certify the fibers conform to the Manufacturer's specifications for the product and that the minimum strength and modulus, measured in accordance with ASTM D4018 or ASTM D2585, are not less than the specified minimum values for resin-impregnated strands.

(c) Resin Material Requirements. The epoxy resin used in the pre-preg shall be the same as the resin specified in the Laminate Procedure Specification. Each epoxy resin shall be traceable by the name of its supplier and trade name or number of that supplier. The pre-preg supplier shall furnish the Manufacturer a Certificate of Analysis for each epoxy resin. The Certificate of Analysis shall include the following information:

(1) resin identification including separate curing agents, if applicable

(2) batch number(s) for each pre-preg lot

(3) date of manufacture

(4) pre-preg is within resin shelf life. Pre-preg not within the resin shelf life shall be rejected.

(d) The pre-preg supplier shall certify for each batch the value and limits required by the specification of the properties identified in Table 10-307-1. The values obtained for viscosity and specific gravity for the resin alone shall be within the limits of the supplier's specification for that resin and as listed in the Laminate Procedure Specification. The values obtained for gel time shall be for a particular resin curing system test formulation and temperature and shall be within the limits listed in the Laminate Procedure Specification.

(e) The Manufacturer shall test each batch of pre-preg per Table 10-307-2 to ensure the material characteristics of the pre-preg resin have not changed from specified values listed in the Laminate Procedure Specification. The test formulation and temperature shall be

Table 10-307-1
Pre-Preg Supplier Certifications

Item	Required Certifications
Resin	Viscosity: ASTM D445 or D2196
	Gel time: ASTM D2471
	Specific gravity: Section X, Mandatory Appendix 5
Pre-preg	Resin content: D3529
	Resin flow: D3531

Copyright ASME International (BPVC)

Table 10-307-2
Pre-Preg Systems Tests by CRPV Manufacturer

Item	Required Tests
Resin content	ASTM D3529
Resin flow	ASTM D3531

representative of the formulation used during CRPV fabrication. These test results shall be certified by the Manufacturer and shall be included in the Manufacturer's Construction Records. The pre-preg supplier shall specify pre-preg shelf life requirements and storage temperature and include a copy of the fiber certification from the fiber manufacturer as part of the pre-preg certification package.

10-308 LAMINATE CURE

The Manufacturer shall ensure the resin used in fabricating laminate is correctly cured. The degree of cure shall be demonstrated by the Barcol hardness test per ASTM D2583. Barcol hardness readings shall be within the tolerance specified by the resin supplier. If the resin supplier does not provide Barcol hardness specifications for the resin/curing system used, the Manufacturer shall establish Barcol hardness specifications. Barcol hardness specifications established by the Manufacturer shall be documented in the Manufacturer's Construction Records.

10-309 LAMINATE TENSILE STRENGTH

(a) The Manufacturer shall determine the tensile strength and modulus of elasticity of the laminate used in the manufacture of a CRPV.

(b) ASTM D2343 shall be used to determine the tensile strength and modulus of elasticity of the laminate.

(c) The measured laminate tensile strength and modulus of elasticity shall be part of the Laminate Procedure Specification and shall be recorded on Section VIII, Division 3, Form CRPV-2A as part of the Laminate Procedure Qualification Record.

10-310 INTERLAMINAR SHEAR STRENGTH

(a) The laminates used in manufacturing a CRPV shall have minimum interlaminar shear strengths of 3,000 psi (20.7 MPa) for vinyl ester, 2,000 psi (13.8 MPa) for polyester, and 5,000 psi (34 MPa) for epoxy resins as determined by ASTM D2344. The test results shall be included in the Construction Records. The interlaminar shear strength shall be part of the Laminate Procedure Specification and shall be recorded on Section VIII, Division 3, Form CRPV-2A as part of the Laminate Procedure Qualification Record.

(b) The interlaminar shear strength shall be determined for each laminate before initial use. Subsequent determinations of interlaminar shear strength are required only when there is a change in the laminate formulation.

10-400 FABRICATION

10-401 SCOPE

This item provides rules governing the fabrication of fiber-reinforced plastic laminates for use in the construction of CRPVs. The fabrication process is limited to circumferential (hoop-oriented) filament-winding processes with a winding angle deviation of no more than 10 deg from the circumferential direction.

10-402 LAMINATE PROCEDURE SPECIFICATION

(a) For every combination of fabrication method, Design Specification, and material variation employed in fabricating laminate for a CRPV, the Manufacturer shall prepare a Laminate Procedure Specification that shall be qualified in accordance with 10-600 before it is used for laminate fabrication in the construction of CRPVs. The Laminate Procedure Specification shall provide, as a minimum, all information concerning material properties and manufacturing procedures as required on Section VIII, Division 3, Form CRPV-2A. The Qualification Test Report and Section VIII, Division 3, Form CRPV-2A shall be part of the Manufacturer's Construction Records. A new Laminate Qualification Test Report shall be prepared whenever qualification is required by this Appendix.

(b) Any variation in the essential variables from the Laminate Procedure Specification for CRPVs shall require the Laminate Procedure Specification to be rewritten, the design analysis to be reperformed, and the specification to be requalified before using it to fabricate laminates.

(c) Production laminates shall be fabricated per a Laminate Procedure Specification. As a minimum, the following essential variables shall be within tolerances as specified in the Laminate Procedure Specification:

(1) fiber (manufacturer and designation)

(2) fiber mechanical properties

(3) fiber surface treatment (manufacturer and designation)

(4) resin (type, manufacturer, and designation)

(5) curing agent (manufacturer and designation)

(6) method of impregnation

(7) percent of fiber in laminate (outside range specified in Procedure Specification)

(8) variables of winding process

(9) curing schedule

(10) weight (mass) of laminate (outside range specified in Procedure Specification)

(11) Barcol hardness (outside range specified in Procedure Specification)

Copyright ASME International (BPVC)

10-403 PRODUCTION LAMINATE REQUIREMENTS

10-403.1 Fiber Content. The laminate shall consist of fiber strands in a resin matrix. The weight percent of fiber in the laminate shall conform to that denoted in the Laminate Procedure Specification with a tolerance of +6% and −0%. The weight percent of fiber in the laminate shall be determined for 1 of every 300 CRPVs produced. The weight (mass) of laminate applied to the metallic shell shall be determined for 1 of every 100 CRPVs produced. The Inspector shall select the CRPV for examination.

10-403.2 Fiber Application. In general, winding patterns shall be so arranged that stressed fibers are aligned to resist circumferential stress. Specific winding patterns for the continuous fiber strands shall be used as defined in the Laminate Procedure Specification. Any winding pattern that places the filaments in the circumferential orientation (maximum 10-deg deviation from the circumferential direction) and is designated in the Laminate Procedure Specification may be used.

10-403.3 Resin System. The resin system shall be one of the systems specified in 10-300 and is appropriate for the particular service conditions specified in the User's Design Specification.

10-403.4 Cure. If other than ambient temperature cure is employed, the design and operation of the curing equipment shall provide uniform heating over the entire surface of the CRPV. Heating may be done from inside or outside of the CRPV or from inside and outside. The cure times and temperatures shall conform to those specified in the Laminate Procedure Specification. The surface of the laminate shall be at the cure temperature for the minimum time required for post cure. Heat-up and cool-down times shall be excluded.

10-403.5 Filament Winding Process

10-403.5.1 Tensioning. Tension on the strands of filaments during the winding operation shall be controlled to ensure a uniform application of the composite reinforcement onto the metallic shell and shall be as specified in the Laminate Procedure Specification.

10-403.5.2 Winding Speed. Winding speed shall be limited only by the ability to

(a) meet the tensioning requirements
(b) conform to the specified winding pattern
(c) ensure adequate resin impregnations

The winding speed shall be as specified in the Laminate Procedure Specification.

10-403.5.3 Bandwidth and Spacing. The bandwidth and spacing shall conform to those specified in the Laminate Procedure Specification.

10-404 VARIATION FROM LAMINATE PROCEDURE SPECIFICATION

A variation in any essential variable from the tolerances stated in the Laminate Procedure Specification shall result in rejection of the CRPV.

10-405 GALVANIC CORROSION

When carbon fibers are used, the outer surface of the metallic shell shall be protected from any galvanic corrosion that may occur due to dissimilar materials (steel or aluminum) in contact with carbon fibers. Acceptable methods for this purpose include a suitable polymer coating, a glass-fiber/epoxy composite layer, or a polymer film wrap that separates the galvanically dissimilar materials interface surfaces.

10-406 REPAIRS OF IMPERFECTIONS

In the event any of the unacceptable imperfections listed in Table 10-503-1 or Table 10-503-1M extends into the structural layer, or the structural fibers are cut or damaged, the imperfections or damaged fibers shall be deemed not repairable and the CRPV rejected. If the unacceptable imperfections listed in Table 10-503-1 or Table 10-503-1M are contained in the nonstructural, protective layer of the laminate, the layer may be repaired, unless prohibited by the Laminate Procedure Specification. The minimum thickness, fiber content, and protective capabilities of the repaired protective layer shall be the same as the unrepaired protective layer.

10-407 REPLACEMENT OF LAMINATE

If a CRPV is rejected because the structural layer is damaged, or there is an unacceptable variation in any essential variable, the laminate may be completely removed from the metallic shell before there is any pressure testing of the vessel. Care shall be taken to ensure the metal shell outside diameter surface is not damaged during laminate removal. Damage to the metallic shell, caused by removal of the laminate, shall be repaired per the requirements of Section VIII, Division 3, Part KE. Laminate may then be reapplied per the Laminate Procedure Specification.

10-408 SEALING OF LAMINATE

The exterior surface of the laminate and the laminate/metallic interface shall be sealed with a waterproof barrier after all testing and examinations of the laminate are completed. The Manufacturer shall include the life expectancy of the waterproof barrier in the Design Report.

Copyright ASME International (BPVC)

10-409 PAINTING OF LAMINATE

If specified in the User Design Specification, the laminate may be painted following all required inspections and certifications by the Inspector.

10-500 EXAMINATION AND TESTING REQUIREMENTS

10-501 SCOPE

The following paragraphs provide examination and testing requirements for laminates.

10-502 QUALIFICATION OF NONDESTRUCTIVE EXAMINATION PERSONNEL

(a) The Manufacturer shall certify that each examiner performing visual tests per this Appendix has been qualified to the requirements of Section V, Article 9.

(b) The Manufacturer shall certify that each examiner performing acoustic emission testing per this Appendix has attended a dedicated training course on the subject, passed a written examination, and has the recommended experience. The training course shall be appropriate for specific NDT Level II qualification per ASNT SNT-TC-1A.

10-503 EXAMINATIONS AND TESTS

(a) Each laminate shall be subjected to the examinations required by this Appendix and shall conform to the specified requirements with results recorded in Production Test Reports. Examinations detailed in (1) through (5) shall be performed before the hydrostatic test detailed in (6). A final visual examination, in accordance with (1), shall follow the acoustic emission examination. The laminate Production Test Report shall become part of the Manufacturer's Construction Records.

(1) Visual Examination. Each laminate shall be visually examined with a suitable light source to the specified requirements in Table 10-503-1 or Table 10-503-1M.

(2) Design Dimensions Examination. Each CRPV shall be examined for conformance to dimensions and tolerances shown on the design drawings.

(3) Visual Examination of Repaired Areas. Each repaired area shall be visually examined and shall comply with all acceptance requirements of Table 10-503-1 or Table 10-503-1M. The repaired area shall have translucency and surface finish comparable to the remainder of the laminate.

(4) Thickness Check. The thickness of each production laminate shall be determined at a minimum of three points along its length on each of four quadrants. When laminates are longer than 5 ft (1.5 m), one additional determination shall be made for each additional 5 ft (1.5 m) or portion thereof. The thickness determinations shall be made with mechanical gages, ultrasonic gages, or other devices having an accuracy of ±2% of true thickness.

(5) Visual Thickness Check. Where visual indications of deviation from design thickness exist at points other than those at which measurements are required, thickness determinations shall be made in sufficient quantity to correctly locate and define the deviant areas. Thicknesses less than the value specified in the Manufacturer's Design Report are prohibited.

(6) Hydrostatic Pressure Test. For vessels that are subjected to hydrostatic pressurization that is designed to provide an initial stress in the metallic shell and laminate, the initial pressure shall be applied before the hydrostatic test and acoustic emission examination.

(7) Acoustic Emission Examination.

(-a) An acoustic emission examination shall be performed during pressurization of each CRPV. The examination shall follow the hydrostatic test and shall be in accordance with the requirements of this Appendix and ASTM E1067. Where the provisions of this Appendix differ from those of ASTM E1067, the provisions of this Appendix shall govern.

(-b) Vessel Conditioning. The internal pressure in the vessel shall not exceed 10% of the hydrostatic test pressure for 12 hr prior to the acoustic emission examination.

(-c) The test fluid shall be water or another appropriate liquid. The minimum liquid temperature shall be sufficient to ensure that the vessel wall temperature is not less than 40°F (5°C) and not greater than the lesser of the design temperature or 100°F (38°C).

(-d) Instrumentation shall be as detailed in ASTM E1067, paragraph 7. The recommended and preferred instrument features listed in ASTM E1067, paragraph 7.2 are required. Peak-amplitude detection for each input channel is also required. Time of arrival shall be measured to an accuracy of 1 μsec. All test data, including time and pressure, shall be recorded for post-test playback and analysis. The data acquisition threshold shall be at or below the threshold of detectability defined in ASTM E1067, paragraph A2.2.

(-e) Sensor locations and spacing shall be according to ASTM E1067, paragraph 9.3. The attenuation characterization shall be performed in the hoop and longitudinal directions and at 45 deg to the axis of the vessel. Additional lead breaks may be necessary to accurately determine the maximum sensor spacing in each direction. The requirement that the attenuation characterization be performed above the liquid line shall not apply to vessels. Regardless of vessel size, at least two sensors shall be used so that electromagnetic interference is easily detected by simultaneity of arrival.

(-f) Pressurization Cycle. The pressure shall be held at 10% of the hydrostatic test pressure for a minimum of 10 min, then raised to 98% of the hydrostatic test pressure, and held constant for 30 min. The initial hold period

Copyright ASME International (BPVC)

Table 10-503-1
Visual Acceptance Criteria for FRP Laminate (U.S. Customary Units)

Imperfection		Maximum Size and Cumulative Sum of Imperfections Allowed After Repair [Note (1)], [Note (2)]
Type	**Definition**	
Air bubble (void)	Air entrapped within and between piles of reinforcement, usually spherical in shape	For maximum diameter of $\frac{1}{8}$ in., maximum density 4 per square inch For maximum diameter $\frac{1}{16}$ in., maximum density 10 per square inch
Blister	Rounded elevation of laminate surface with boundaries that may be sharply defined, resembles blister on human skin	For maximum diameter of $\frac{1}{8}$ in., density 1 per square foot
Burned areas from excessive exotherm	Shows evidence of thermal decomposition through discoloration or heavy distortion	None
Chips	Small pieces broken off an edge of the laminate that includes fiber breakage	Maximum diameter $\frac{1}{16}$ in., or maximum length $\frac{1}{4}$ in. and maximum depth $\frac{1}{16}$ in. [Note (3)]
Cracks	Actual rupture or debond of portions of laminate	None, except circumferential through thickness cracks in the laminate are acceptable. Cracks shall not deviate from wind angle by more than 2 deg, and crack width shall not exceed $\frac{1}{32}$ in.
Crazing	Fine cracks at the surface of the laminate	For maximum length of 1 in. and maximum depth of $\frac{1}{64}$ in., maximum density 5 in any square foot
Delamination (edge)	Separation of layers in laminate	None
Dry spot	Area of incomplete surface film where the reinforcement was not wetted with resin	None
Edge exposure	Exposure of multiple layers of reinforcing matrix to the environment, usually the result of shaping or cutting a section of laminate	None
Fish-eye	Particles included in laminate that are foreign to its composition (not a minute speck of dust)	Maximum diameter $\frac{1}{8}$ in., never to penetrate lamination to lamination; must be fully resin encapsulated [Note (3)]
Foreign inclusion	Small globular mass that has not blended completely into the surrounding material and is particularly evident in a transparent or translucent material	Maximum $\frac{1}{8}$ in. diameter [Note (3)]
Pimples	Small, sharp, conical elevations on the surface of laminate	No limit; must be fully resin filled and encapsulated
Pit	Small crater in surface of laminate	Maximum diameter $\frac{1}{8}$ in. and maximum depth $\frac{1}{16}$ in.; no exposed fibers [Note (3)]
Porosity	Presence of numerous visible tiny pits (pinholes), approximate dimension 0.010 in.	None to fully penetrate surface; no more than 15 per square inch; no exposed fibers
Scratches	Shallow marks, grooves, furrows, or channels caused by improper handling	None more than 6 in. long; no exposed fibers [Note (3)]
Wrinkles and creases	Generally linear, abrupt changes in surface plane caused by laps of reinforcing layers, or polyester film overlap	None
Band width gap	The space between successive winding fiber bands that are intended to lay next to each other	None
Band width overlap	An area where the edge of a fiber band has laid on top of a previous fiber band, although intended to lay next to each other	2 strands max.
Band width splaying	An unintended space between individual fibers in a fiber band that results in a gap between fibers	None

Copyright ASME International (BPVC)

Table 10-503-1
Visual Acceptance Criteria for FRP Laminate (U.S. Customary Units) (Cont'd)

Imperfection		Maximum Size and Cumulative Sum of Imperfections Allowed After Repair [Note (1)], [Note (2)]
Type	**Definition**	
Strand dropout [Note (4)]	When one or more strands of a fiber band ceases to be applied to the CRPV shell being wound due to breakage or inadequate supply	<2% of strands

NOTES:
(1) Above acceptance criteria apply to condition of laminate after repair and hydrostatic test.
(2) Noncatalyzed resin is not permissible to any extent in any area of the laminate.
(3) This type of imperfection is subject to cumulative sum limitations as follows:
  (a) Maximum number allowable in any square foot is 5.
  (b) Maximum number allowable in any square yard is 30.
(4) In the filament winding process, it is common practice to wind many fiber strands simultaneously. These strands are gathered together side-by-side to form the band of fiber that is wound around the metallic shell. As the shell is rotated, these strands are run through a resin bath, fiber placement guides, and rollers that may cause a strand to break; called strand dropout. Many times, strand dropout is corrected before continuing, but it may be desirable to complete the winding pattern with the dropped fiber strands.

Copyright ASME International (BPVC)

Table 10-503-1M
Visual Acceptance Criteria for FRP Laminate (SI Units)

Imperfection		Maximum Size and Cumulative Sum of Imperfections Allowed After Repair [Note (1)], [Note (12)]
Type	Definition	
Air bubble (void)	Air entrapped within and between piles of reinforcement, usually spherical in shape	For maximum diameter of 3.2 mm, maximum density 4 per 650 mm^2 For maximum diameter of 1.6 mm, maximum density 10 per 650 mm^2
Blister	Rounded elevation of laminate surface with boundaries that may be sharply defined, resembles blister on human skin	For maximum diameter of 3.2 mm, density 1 per 930 cm^2
Burned areas from excessive exotherm	Shows evidence of thermal decomposition through discoloration or heavy distortion	None
Chips	Small pieces broken off an edge of the laminate that includes fiber breakage	Maximum diameter 1.6 mm, or maximum length 6.4 mm and maximum depth 1.6 mm [Note (3)]
Cracks	Actual rupture or debond of portions of laminate	None, except circumferential through thickness cracks in the laminate are acceptable. Cracks shall not deviate from wind angle by more than 2 deg, and crack width shall not exceed 0.794 mm
Crazing	Fine cracks at the surface of the laminate	For maximum length of 0.25 mm and maximum depth of 0.4 mm, maximum density 5 in. any 930 cm^2
Delamination (edge)	Separation of layers in laminate	None
Dry spot	Area of incomplete surface film where the reinforcement was not wetted with resin	None
Edge exposure	Exposure of multiple layers of reinforcing matrix to the environment, usually the result of shaping or cutting a section of laminate	None
Fish-eye	Particles included in laminate that are foreign to its composition (not a minute speck of dust)	Maximum diameter 3.2 mm, never to penetrate lamination to lamination; must be fully resin encapsulated [Note (3)]
Foreign inclusion	Small globular mass that has not blended completely into the surrounding material and is particularly evident in a transparent or translucent material	Maximum diameter 3.2 mm [Note (3)]
Pimples	Small, sharp, conical elevations on the surface of laminate	No limit; must be fully resin filled and encapsulated
Pit	Small crater in surface of laminate	Maximum diameter 3.2 mm and maximum depth 1.6 mm; no exposed fibers [Note (3)]
Porosity	Presence of numerous visible tiny pits (pinholes), approximate dimension 0.254 mm	None to fully penetrate surface; no more than 15 per 650 mm^2; no exposed fibers
Scratches	Shallow marks, grooves, furrows, or channels caused by improper handling	None more than 15.2 cm long; no exposed fibers [Note (3)]
Wrinkles and creases	Generally linear, abrupt changes in surface plane caused by laps of reinforcing layers or polyester film overlap	None
Band width gap	The space between successive winding fiber bands that are intended to lay next to each other	None
Band width overlap	An area where the edge of a fiber band has laid on top of a previous fiber band, although intended to lay next to each other	Maximum two strands
Band width splaying	An unintended space between individual fibers in a fiber band that results in a gap between fibers	None

Copyright ASME International (BPVC)

Table 10-503-1M
Visual Acceptance Criteria for FRP Laminate (SI Units) (Cont'd)

Imperfection		Maximum Size and Cumulative Sum of Imperfections Allowed After Repair [Note (1)], [Note (12)]
Type	Definition	
Strand dropout [Note (4)]	When one or more strands of a fiber band ceases to be applied to the CRPV shell being wound due to breakage or inadequate supply	<2% of strands

NOTES:
(1) Above acceptance criteria apply to condition of laminate after repair and hydrostatic test.
(2) Noncatalyzed resin is not permissible to any extent in any area of the laminate.
(3) This type of imperfection is subject to cumulative sum limitations. Maximum number allowable in any square meter is 36.
(4) In the filament winding process, it is common practice to wind many fiber strands simultaneously. These strands are gathered together side-by-side to form the band of fiber that is wound around the metallic shell. As the shell is rotated, these strands are run through a resin bath, fiber placement guides, and rollers that may cause a strand to break; called strand dropout. Many times, strand dropout is corrected before continuing, but it may be desirable to complete the winding pattern with the dropped fiber strands.

and pressurization from 10% to 50% of the hydrostatic test pressure shall be used to identify and eliminate background noise. The last 5 min of the initial hold period shall not begin until evaluation and minimization of background have been completed. In order to assess the effect of fill rate on background noise, the pressurization rate specified in ASTM E1067, paragraph 11.1.1, may be varied for the pressurization from 10% to 50% of the hydrostatic test pressure. For pressurization above 50% of the hydrostatic test pressure, the provisions of ASTM E1067, paragraph 11.1.1, shall apply.

(-g) Data Acquisition. Test data may be recorded for the entire pressurization cycle. Data acquired during the last 5 min of the initial pressure hold, during pressurization from 50% to 98% of the hydrostatic test pressure, and from the final 30-min pressure hold shall be recorded and used to evaluate the vessel.

(-h) Evaluation and acceptance criteria shall be in accordance with ASTM E1067. An acceptable vessel shall meet all of the criteria listed in Table 10-503-2. Background noise shall be discounted when applying acceptance criteria.

(b) Records. The results of the preceding examinations shall be included in the Manufacturer's Construction Records.

10-600 LAMINATE PROCEDURE QUALIFICATION

10-601 GENERAL

The tests and examinations required in this paragraph are intended to qualify the design of a prototype laminate as applied to a Section VIII, Division 3 shell and the Procedure Specification to which it was fabricated. The report of these tests shall be designated the Laminate Qualification Test Report and shall become part of the Manufacturer's Design Report.

10-602 RESPONSIBILITY FOR QUALIFICATION

Each Manufacturer shall be responsible for qualifying the Procedure Specifications used in fabricating laminates for Section VIII, Division 3 vessels. The fabrication process is limited to circumferential filament-winding processes

Table 10-503-2
Acoustic Emission Evaluation Criteria

Criteria	First Loading	Subsequent Loadings
Emissions during pressure hold	Not greater than 5 events per minute beyond 2 min with an amplitude greater than A_M [Note (1)]	Not greater than 1 event per minute beyond 2 min with an amplitude greater than A_M [Note (1)]
Cumulative duration	Less than N_D [Note (2)]	Less than $N_D/2$ [Note (2)]
High amplitude hits [Note (3)]	Less than or equal to 10	Less than or equal to 5

NOTES:
(1) A_M = the decibel level defined in ASTM E1067, paragraph A2.5.
(2) N_D = cumulative duration value defined in ASTM E1067, paragraph A2.5.
(3) High amplitude hits are those having amplitude equal to or greater than the Reference Amplitude Threshold defined in ASTM E1067, paragraph A2.3.

Copyright ASME International (BPVC)

with a winding angle of no more than 10 deg from the circumferential direction.

10-603 PRODUCTION WORK WITHOUT QUALIFICATIONS

No fabrication shall be undertaken on vessels to be stamped with the Certification Mark before a written Procedure Specification has been prepared and qualified by the Manufacturer. The Procedure Specification shall be qualified by testing one or more prototype vessels as defined in 10-614, 10-615, and 10-616. A single prototype vessel shall meet the requirements of all tests and examinations specified in 10-600.

10-604 MAINTENANCE OF QUALIFICATION RECORDS

The Manufacturer shall maintain records of procedures employed in fabricating laminates. The Manufacturer shall also maintain records of the tests and their results by which his Procedure Specifications were qualified for use in fabrication. The Manufacturer shall keep these records on file for a minimum of 5 yr after production of laminates has ceased.

10-605 ESSENTIAL VARIABLES

The Procedure Specification shall address each of the essential variables listed in 10-402(c). The prototype laminate(s) shall be fabricated within the tolerances specified in the Procedure Specification.

10-606 NONESSENTIAL VARIABLES

Changes in variables other than those listed in 10-605 are considered nonessential. Changes may be made to nonessential variables without requalification of the procedure provided the Procedure Specification is revised to show the changes.

10-607 ALTERNATIVE REQUIREMENTS

When a number of laminates are identical in every detail of design, materials, and fabrication except for a difference in shell length, the entire group or series may be qualified by subjecting the longest and shortest length laminates to these tests. To qualify for this alternative method, every laminate in the series shall be identical in all essential variables.

10-608 LAMINATE THICKNESS

The thickness of each prototype laminate shall be determined as required in 10-503(a)(4).

10-609 WEIGHT OF RESIN AND FIBER

The percentage of weight of resin and fiber in each prototype laminate shall be determined by means of an ignition test per ASTM D2584-68 (1985) or matrix digestion per ASTM D3171 of a sample taken from an undamaged portion of the laminate used for the pressure qualification test.

10-610 WEIGHT

Each prototype laminate shall be weighed within an accuracy of ±1% and the results recorded on the Qualification Test Report.

10-611 VISUAL EXAMINATION

Each prototype laminate shall be visually examined for imperfections. Classification and acceptance level of imperfections shall be per Table 10-503-1 or Table 10-503-1M.

10-612 BARCOL HARDNESS TESTS

(a) Each prototype laminate shall have a minimum of three Barcol hardness determinations made along its length on each of its four quadrants. When the laminate length exceeds 5 ft (1.5 m), one additional set of determinations shall be made for each additional 5 ft (1.5 m) or portion thereof. A series of readings shall be taken at each quadrant on smooth, correctly oriented surfaces per ASTM D2583.

(b) The Barcol hardness values shall be recorded in the Qualification Test Report and shall be used as reference values in subsequent production tests.

10-613 ACOUSTIC EMISSION EXAMINATION

(a) Acoustic emission examination shall be conducted in accordance with 10-503(a)(7). The acoustic emission examination shall be carried out after all tests and examinations indicated in 10-608 through 10-612 have been completed. All repairs that are required as a result of the other tests and examinations shall be completed prior to the acoustic emission examination.

(b) The acoustic emission examination report shall be included in the Qualification Test Report and referenced on Section VIII, Division 3, Form CRPV-2A.

10-614 CYCLIC PRESSURE QUALIFICATION TEST

One or more CRPV prototype vessels shall be subjected to a cyclic pressure test as defined in Section VIII, Division 3, Part KF, KF-1212(b).

Copyright ASME International (BPVC)

10-615 HYDROSTATIC PRESSURE QUALIFICATION TEST

One or more CRPV prototype pressure vessels shall be subjected to a hydrostatic pressure qualification test as defined in Section VIII, Division 3, Part KF, KF-1212(b).

For vessels that are subjected to hydrostatic pressurization that is designed to provide an initial stress in the metallic shell and laminate, the pressure shall be applied before the hydrostatic test and acoustic emission examination.

10-616 LAMINATE DISBONDMENT TEST

The CRPV prototype vessel used for the hydrostatic pressure qualification test shall be examined for holidays[25] using Method B of ASTM G62 in areas not affected by the burst with the following additions:

(a) After the specified testing, using abrasive cutting wheels, radial cuts shall be made through the laminate to the metallic shell extending at least 0.75 in. (220 mm) from the center of the holiday. Using a levering action, the laminate shall be chipped off, continuing until the laminate demonstrates a definite resistance to the levering action.

(b) The disbonded distance from the original holiday center along the radial cuts shall be measured and averaged for each specimen.

(c) The acceptance criteria for laminate/primer/metallic bond shall be the same as for the fusion-bonded epoxy as specified in ASTM G62.

The CRPV laminate is tougher to cut/gouge with the tip of a utility knife than coatings applied for corrosion protection. Therefore, larger equipment and more force are required to force/pry/chip pieces of the laminate.

10-617 REQUALIFICATION OF LAMINATE PROCEDURE SPECIFICATION

(a) A qualified Laminate Procedure Specification shall be requalified at least every 1,000 CRPVs produced per Procedure Specification or at a minimum of once per year before further use in manufacturing CRPVs. The CRPV to be used for requalification shall be selected at random by the Inspector.

(b) The laminate requalification shall follow the same procedures as those outlined in the Laminate Procedure Specification Qualification. The tests and examinations required by this paragraph shall be designated as the Requalification Test Report, shall be documented on Section VIII, Division 3, Form CRPV-2A, appended to the original Qualification Test Report, and included in the Manufacturer's Construction Records.

10-618 CRPV PROTOTYPE VESSELS

(a) CRPV(s) subject to these tests and examinations shall be designated as CRPV Prototype Vessels. CRPV Prototype Vessels that are used to qualify or requalify a Laminate Procedure Specification shall comply with all requirements of this Appendix but shall not be Code stamped.

(b) Each CRPV Prototype Vessel used for qualifying or requalifying the Laminate Procedure Specification shall be fabricated and examined in accordance with the requirements above, and the results shall be documented in a separate Section VIII, Division 3, Form CRPV-2A and Qualification Test Report.

10-700 INSPECTOR'S DUTIES

10-701 INSPECTOR'S DUTIES RELATIVE TO QUALIFICATION TESTS OF PROTOTYPE LAMINATE

The Inspector shall verify the cyclic pressure and acoustic emission tests and witness the hydrostatic qualification pressure tests of the prototype laminate by means of which the laminate procedure qualification procedure is qualified.

10-702 INSPECTOR'S DUTIES RELATIVE TO SPECIFIC LAMINATES

The Inspector has the duty of making all required inspections, plus such other inspections he deems necessary to assure himself compliance with all requirements of this Appendix.

10-703 INSPECTION OF MATERIAL

The Inspector shall assure himself that all materials used in the fabrication of the laminate comply with the requirements of this Appendix and the Design Specification.

10-704 INSPECTION DURING FABRICATION

The Inspector shall make inspections, including making measurements of each laminate at such stages of fabrication as are required, plus such other inspections as he deems necessary to assure himself that fabrication is in accordance with the requirements of this Appendix.

10-705 SPECIFIC INSPECTION REQUIREMENTS

(a) Check of Laminate Weight. The Inspector shall verify that the weight of the combined fiber filaments and resin conforms to requirements of 10-610.

(b) Check of Fabrication Procedures. The Inspector shall verify that the speed of winding, uniformity in tension, and adherence to the predetermined pattern of the qualified Procedure Specification is followed (see 10-503).

Copyright ASME International (BPVC)

(c) Check of Cure. The Inspector shall satisfy himself by suitable hardness tests, or by other means, the laminate has been properly cured (see 10-612).

(d) Visual Inspection. The Inspector shall examine the laminate for indentations, cracks, porosity, air bubbles, exposed fibers, lack of resin, excess resin, thinned areas, wrinkling, pattern deviations, and delaminations. Results shall be documented as required in 10-503(b). Acceptance criteria are defined in Table 10-503-1 or Table 10-503-1M.

(e) The physical property tests of specimens of material, hydrostatic tests, cyclic pressure and hydrostatic qualification pressure tests, and any permitted retests shall be verified by the Inspector.

Copyright ASME International (BPVC)

NONMANDATORY APPENDIX AA SUGGESTED METHODS OF PRELIMINARY DESIGN FOR CLASS I VESSELS

ARTICLE AA-1 GENERAL

AA-100 SCOPE

(a) Section X provides two basic methods for qualifying the design adequacy of a fiber-reinforced plastic pressure vessel. To assist the designer in establishing the thickness of Class I vessels, the design of which must be qualified by test of prototype vessels (see Article RT-2), this Appendix gives suggested methods of arriving at a tentative thickness for principal pressure parts of Class I vessels. Additionally, this Appendix indicates the type of end closures which have been found satisfactory when fabricated of or attached to fiber-reinforced plastic pressure vessels.

(b) Design procedures other than those given in this Appendix may be used at the Fabricator's option, as there are no mandatory design rules for Class I vessels.

(c) The suggested methods in this Appendix are not sufficient for the design of Class II vessels.

AA-101 CAUTIONS TO BE USED IN DESIGN

Since fiber-reinforced plastic laminates may fail when subjected to cyclic bending stresses, the designer is cautioned to avoid design details in which bending stresses will be developed by internal or external pressure or other loadings.

Copyright ASME International (BPVC)

ARTICLE AA-2
SHELLS OF REVOLUTION UNDER INTERNAL PRESSURE

AA-200 GENERAL

The tentative thicknesses and design pressures of cylindrical and spherical shells under internal pressure may be estimated by means of the equations given in Article AA-2.

(19) **AA-200.1 Nomenclature.** The symbols used in Article AA-2 are defined as follows:

D = inside diameter of a head skirt or inside length of the major axis of an ellipsoidal head, in. (mm)

N_α = required number of layers of laminates in which the filaments are oriented in the direction of the helix angle α

N_H = required number of layers of laminates in which the filaments are oriented in the hoop direction

P = design pressure, psi (kPa)

R = inside radius of cylinder or sphere, or inside spherical or crown radius of a hemispherical head

S = tentative design stress in a circumferential direction in the wall of a bag-molded or centrifugally cast cylinder or sphere. May be approximated by dividing the stress at the qualification pressure of a similarly constructed pressure vessel by 6.

S_α = allowable design stress of the helix-oriented filaments, psi (kPa) [normally less than the allowable design stress for hoop-oriented filaments due to unavoidable crossovers, discontinuities, etc.; with 400,000 psi (2 760 MPa) E-glass filaments, using the one-sixth design factor required by this Section and applying an efficiency of 70%, S_α would be 47,000 psi (324 MPa)]. For vessels fabricated per RG-404.2 that are intended for internal pressure only, a one-fifth design factor shall be used as required by RT-223.5. For example, using a typical value for E-glass filaments of 400,000 psi (2 760 MPa), the allowable design stress would be 56,000 psi (386 MPa).

S_H = allowable design stress in hoop-oriented filaments, psi (kPa) [with 400,000 psi (2 760 MPa) E-glass filaments, using the one-sixth design factor required by this Section and applying an efficiency of 90%, S_H would be 60,000 psi (410 MPa)]. For vessels fabricated per RG-404.2 that are intended for internal pressure only, a one-fifth design factor shall be used as required by RT-223.5. For example, using a typical value for E-glass filaments of 400,000 psi (2,760 MPa), the allowable design stress would be 72,000 psi (496 MPa).

t = required thickness, in. (mm)

t_α = thickness of the required number of layers of laminates in which the filaments are oriented in the plus and minus α direction, in. (mm)

t_α' = equivalent thickness of the helix-oriented filaments per unit of width of a layer of bands at plus and minus α, in. (mm)

t_H = thickness of the required number of layers of laminates in the hoop direction, in. (mm)

t_H' = equivalent thickness of the hoop-oriented filaments per unit of width of a layer composed of two band thicknesses, in. (mm) [for a typical band density of 6 strands of 225 yield[26] fiberglass rovings per in., $t_H' = 2 \times 1.125 \times {}^{6}/_{225} = 0.06$ in. (1.5 mm) at 70% glass content using 1.2 sp gr resin]

V_α = volume fraction of helix-oriented filaments. [This may range from about 0.45 for low (small) helix angles wound at low tension with high viscosity resin on large diameter mandrels to about 0.65 for high (e.g., above 25 deg) helix angles wound at high tension with low viscosity resin on small diameter mandrels.]

α = filament helix angle for filament-wound vessels, measured relative to a line on the shell surface parallel to the axial center line, deg

AA-201 BAG-MOLDED, CENTRIFUGALLY CAST, AND CONTACT-MOLDED SHELLS

AA-201.1 Cylindrical Shells. The thicknesses of bag-molded, centrifugally cast, and contact-molded cylindrical shells may be estimated by the following equations:[27]

$$t = \frac{PR}{S} \quad \text{or} \quad P = \frac{St}{R}$$

AA-201.2 Spherical Shells. The thicknesses of bag-molded, centrifugally cast, and contact-molded spherical shells may be estimated by the following equations:[27]

$$t = \frac{PR}{2S} \quad \text{or} \quad P = \frac{2St}{R}$$

Copyright ASME International (BPVC)

AA-202 FILAMENT-WOUND SHELLS

AA-202.1 Cylindrical Shells. The thicknesses of filament-wound cylindrical shells may be estimated by the following equations:

$$t = t_H + t_\alpha$$

where

$$t_H = \frac{N_H \times t_H{}'}{V_\alpha}$$

$$N_H = \frac{P \times R}{t_H{}' \times S_H}\left(1 - \frac{\tan^2 \alpha}{2}\right)$$

and

$$t_\alpha = \frac{N_\alpha \times t_\alpha{}'}{V_\alpha}$$

$$N_\alpha = \frac{P \times R}{2 \times t_\alpha{}' \times S_\alpha \cos^2 \alpha}$$

NOTE: The above equations are based on the netting analysis which assumes that the resin carries no load. This is a workably correct assumption of the actual condition in filament-wound composites, highly stressed in tension. For more rigorous analyses, refer to:

(a) "Structural Behavior of Composite Materials," 1964 NASA Contract 7-215, S. Tsai, available from the Office of Technical Services, Dept. of Commerce, Washington, D.C. 20230.

(b) Journal of Composite Materials, Technical Publishing Co., Stamford, CT 06902.

AA-210 DIE-FORMED HEADS, PRESSURE ON CONCAVE SIDE

The thickness at the thinnest point of an ellipsoidal or hemispherical head under pressure on the concave side (plus heads) may be estimated by the equations in AA-210.1 or AA-210.2.

AA-210.1 Ellipsoidal Heads. The thickness and the design pressure of a $1\frac{1}{2}$:1 ratio head may be estimated by the following equations:[27]

$$t = \frac{PR}{S} \quad \text{or} \quad P = \frac{St}{R}$$

AA-210.2 Hemispherical Heads. The thickness and the design pressure of a hemispherical head, in which t does not exceed $0.356R$ or P does not exceed $0.665S$, may be estimated by the following equations:[27]

$$t = \frac{PR}{2S} \quad \text{or} \quad P = \frac{2St}{R}$$

Copyright ASME International (BPVC)

ARTICLE AA-3
SHELLS OF REVOLUTION UNDER EXTERNAL PRESSURE

NOTE: Jacketed vessels are excluded from this Section.

AA-300 GENERAL REQUIREMENTS

No firm rules or equations can be given for vessels under external pressure. However, the following must be considered in the design of the vessel:

(a) the low modulus of elasticity of the material;

(b) the fact that the material is not isotropic;

(c) the orientation of filaments in filament-wound vessels;

(d) lack of uniformity in centrifugal castings and the different distributions and concentrations of glass fibers attainable in centrifugal castings, some of which are not suitable for external pressure.

Copyright ASME International (BPVC)

ARTICLE AA-4
REINFORCEMENT OF OPENINGS IN VESSELS

AA-400 GENERAL REQUIREMENTS

(a) All openings in fiber-reinforced plastic pressure vessels should have additional reinforcement in the form of mats, pads, etc.

(b) Opening reinforcement should be provided in amount and distribution such that the area requirements for adequate reinforcement are satisfied for all planes through the center of the opening and normal to the vessel surface. For a circular opening in a cylindrical shell, the plane containing the axis of the shell is the plane of greatest loading due to pressure.

AA-410 REINFORCEMENT FOR INTERNAL PRESSURE

Suggested methods of predetermining the required reinforcement are given in AA-411 through AA-415.

AA-411 REQUIRED CROSS-SECTIONAL AREA OF REINFORCEMENT

The total cross-sectional area of reinforcement A required in any given plane for a vessel under internal pressure should be not less than

$$A = d \times t_r$$

where

d = diameter in the given plane of the opening in the reinforced plastic structure

t_r = estimated thickness of a seamless shell or head computed in accordance with Article AA-2

AA-412 LIMITS OF REINFORCEMENT

The limits of wall thickness reinforcement, measured parallel to the vessel wall, should be at a distance on each side of the axis of the opening equal to the diameter of the opening in the reinforced plastic structure.

AA-413 AVAILABLE REINFORCEMENT IN WALL

Extra thickness in the vessel wall over and above the thickness estimated to be required for a shell in accordance with Article AA-2 may be considered as reinforcement. The area in the vessel wall available as reinforcement is given by the equation

$$A_1 = (t - t_r)d$$

where

A_1 = area in excess thickness in the vessel wall available for reinforcement, in.^{2} (mm^2)

d = diameter of the opening in the reinforced plastic wall, in. (mm)

t = actual thickness of the reinforced plastic wall, in. (mm)

t_r = required thickness of shell, in. (mm)

AA-414 ADJUSTMENT FOR LOWER STRENGTH OR LOWER MODULUS REINFORCEMENT MATERIAL

(a) Material used for reinforcement, if of lower strength than the material in the vessel wall, shall have its area increased in inverse proportion to the ratio of the minimum strength values of the two materials to compensate for its lower strength. The strain should be compatible with the material having the lower modulus of elasticity.

(b) Where reinforcement material is attached to the vessel wall by an adhesive bonding rather than being cured integral with the vessel, the adhesive-bonded area shall be sufficient to develop the full tensile strength of the element of reinforcement.

AA-415 REINFORCEMENT OF MULTIPLE OPENINGS

(a) When two adjacent openings are spaced less than two times their average diameter, so that their limits of reinforcement overlap, the two openings should be reinforced as required by RD-510 with a combined reinforcement that has a strength equal to the combined strength of the reinforcement that would be required for the separate openings. No portion of the cross section should be considered as applying to more than one opening or be evaluated more than once in the combined area.

(b) Any change in which the size of openings is increased or in which the spacing of openings is decreased should be considered a change in the design of the vessel, which, so modified, should be requalified.

Copyright ASME International (BPVC)

ARTICLE AA-5
ATTACHMENTS AND SUPPORTS

AA-500 GENERAL

(a) Attachments and supports invariably impose localized stresses in tension, torsion, shear, bending, or compression at their point or line of contact with the shell of a pressure vessel.

(b) Because of the low modulus of elasticity and shearing strengths of fiber–resin structures, they are especially vulnerable to localized compressive flexural buckling, torsion, and shear stresses.

(c) Hence, the designer should use special care to avoid as much as possible any unnecessary attachments and to ensure that supports apply the least possible restraint to the pressure vessel (see Article RD-9).

AA-510 ATTACHMENTS

The practice of using a pressure vessel as a structural member to support related auxiliary equipment, piping, etc., should be avoided.

AA-511 ATTACHMENTS REQUIRING REINFORCEMENT

Where a nozzle or the vessel wall must be used for attachments, local reinforcement should be provided to distribute the consequent applied stresses to provide the required safety. This reinforcement should be such as to minimize the total resulting stress. The extra material of the reinforcement should be smoothly blended into the surrounding area.

AA-520 SUPPORTS

Exact rules for the design of supports are not given here due to the very large range of essential variables that must be considered. Details should conform to good structural practice and be carefully analyzed for stresses.

AA-521 AVOIDANCE OF DIRECT CONTACT WITH METAL SUPPORTS

Direct contact of metal supports with highly stressed areas of a fiber-reinforced plastic pressure vessel should be avoided, as dangerously high, local, flexural, and shearing stresses may be generated in the wall of the vessel when it expands or contracts upon changes in its pressure or temperature.

AA-522 SUPPORTS FOR HORIZONTAL VESSELS

(a) When horizontal vessels must be supported by a saddle-type support (see Figure AA-522.1), the vessel wall thickness may be increased at the point of contact, blending this thicker section smoothly and gradually into the more highly stressed adjacent area. This increased thickness should extend uniformly around the complete circumference. The vessel should preferably be isolated from rigid supporting saddles by a very low modulus-of-elasticity cushioning material. If two or more such saddles are required for a long vessel, special provision for avoiding restraint of sliding due to longitudinal expansion and contraction may be required at all except one of the supports.

(b) Increasing the bearing area of the supports so that the weight per square foot imposed by the vessel on the supports is low may eliminate the need to reinforce the vessel wall.

AA-523 VERTICAL VESSELS SUPPORTED BY A RING OR FLANGE

When a ring- or flange-type support is used to support a vertical vessel, the vessel wall at the base of the ring or flange should be blended in gradually with a smooth taper to a thickened section and generous fillet radius at the transition to the flange section itself (see Figure AA-523.1).

AA-524 VESSELS SUPPORTED BY METAL ATTACHMENT IN VESSEL END

Vessels may often be supported by metal attachments embedded in a thickened material at the axial center line of the heads (see Figures AA-524.1 and AA-524.2).

AA-525 PROVISION FOR EXTERNAL FORCES

Due consideration must be given to wind, earthquake, snow, and any other external forces when designing supports.

Copyright ASME International (BPVC)

Figure AA-522.1
Saddle-Type Supports

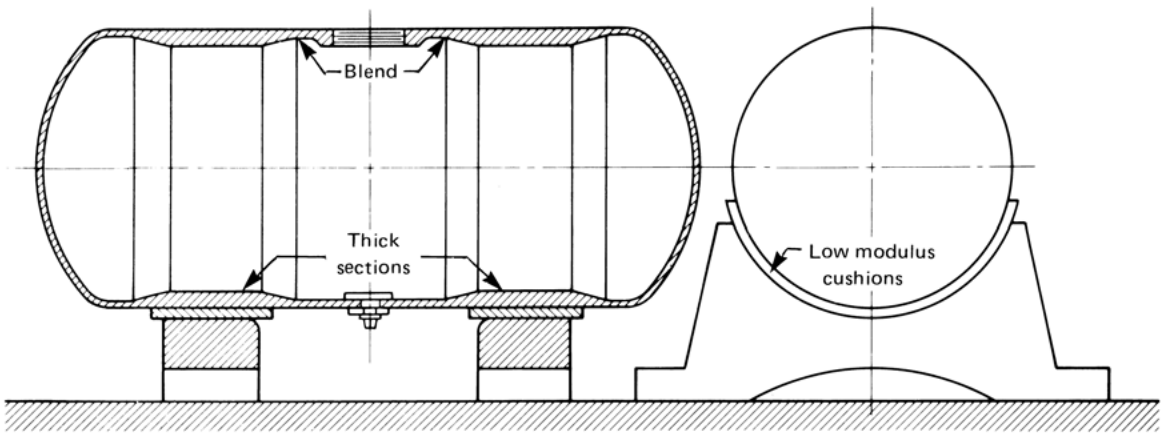

Figure AA-523.1
Ring or Flange Support

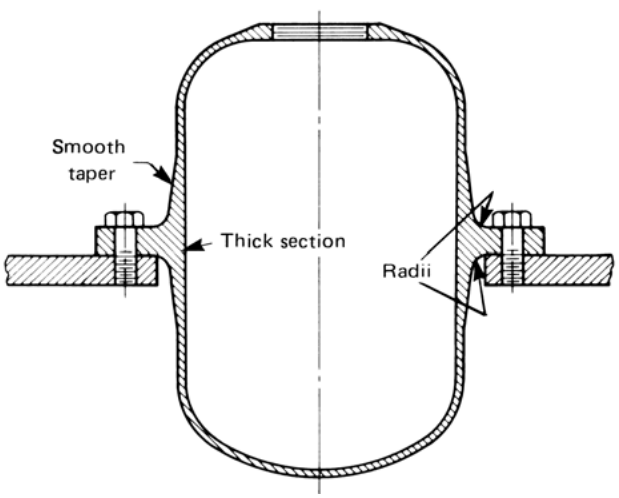

Copyright ASME International (BPVC)

Figure AA-524.1
Metal Attachment in Vessel End

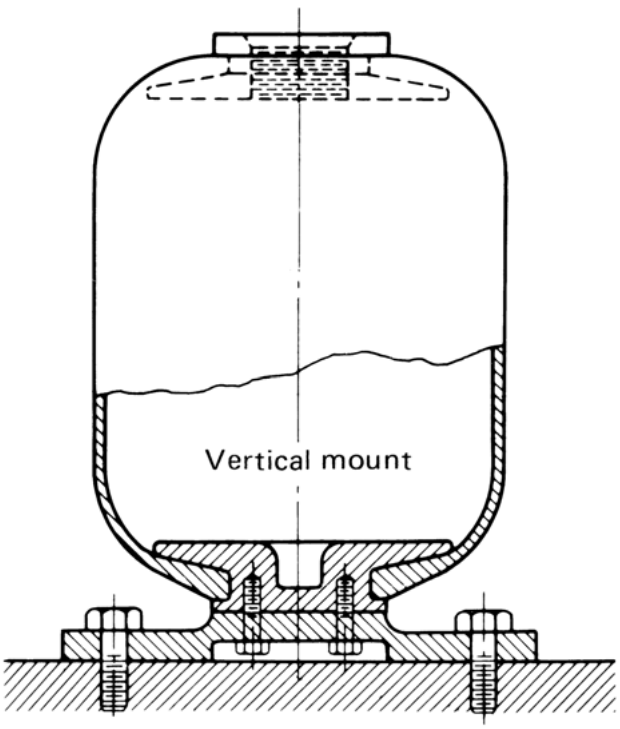

Figure AA-524.2
Metal Attachments in Thickened Ends

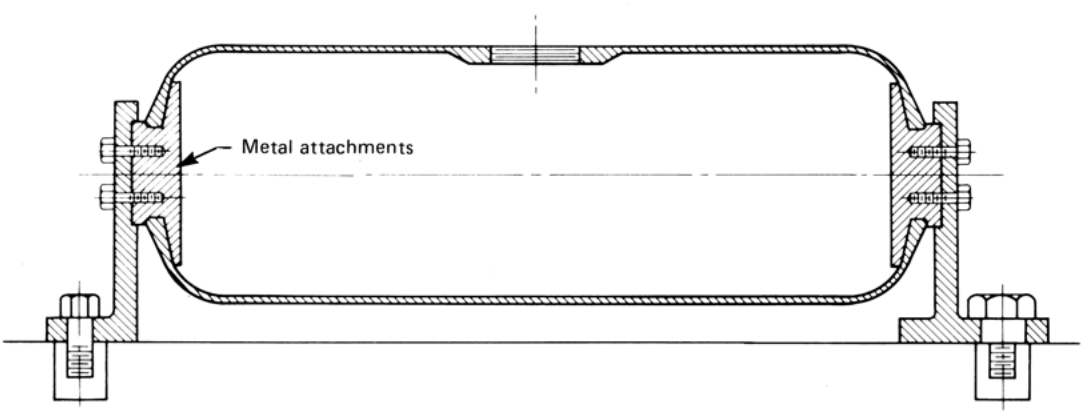

Copyright ASME International (BPVC)

NONMANDATORY APPENDIX AB
INSTALLATION AND OPERATION

AB-100 INTRODUCTION

(a) The rules in this Appendix are for general information only, because they pertain to the installation and operation of pressure vessels, which are the prerogative and responsibility of the law enforcement authorities in those states and municipalities which have made provision for the enforcement of Section X.

(b) It is permissible to use any deviations suggested herein from provisions in the mandatory parts of this Section when granted by the authority having legal jurisdiction over the installation of pressure vessels.

AB-101 ACCESS FOR INSPECTION

(a) Vessels subject to external degradation (see RD-140) should be so installed that there is sufficient access to all parts of the exterior to permit proper inspection of the exterior, unless adequate protection against degradation is provided or unless the vessel is of such size and is so connected that it may be readily removed from its permanent location for inspection.

(b) Vessels having manholes, handholes, or cover plates to permit inspection of the interior should be so installed that these openings are accessible.

(c) In vertical cylindrical vessels subject to chemical degradation from their contents, the bottom head, if dished, should preferably be concave to pressure to ensure complete drainage.

AB-102 MARKING ON THE VESSEL

The marking required by the Code should be so located that it will be accessible after installation, and when installed should not be covered with insulation or other material that is not readily removable (see Article RS-1).

AB-103 PRESSURE RELIEVING SAFETY DEVICES

The general provisions for the installation of pressure relieving devices are fully covered in Part RR. The following paragraphs contain details in arrangement of stop valves for shutoff control of safety pressure relief devices that are sometimes necessary for the continuous operation of processing equipment of such a complex nature that the shutdown of any part of it is not feasible. There are also rules in regard to the design of discharge piping from safety and relief valves, which can only be general in nature because the Design Engineer must fit the arrangement and proportions of such a system to the particular requirements of the operation of the equipment involved.

AB-104 STOP VALVES BETWEEN PRESSURE RELIEVING DEVICE AND VESSEL

(a) A vessel, in which pressure can be generated because of service conditions, may have a full-area stop valve between it and its pressure relieving device for inspection and repair purposes only. When such a stop valve is provided, it should be so arranged that it can be locked or sealed open, and it should not be closed except by an authorized person who should remain stationed there during that period of the vessel's operation within which the valve remains closed, and who should again lock or seal the stop valve in the open position before leaving the station.

(b) A vessel or system (see RR-111) for which the pressure originates from an outside source exclusively may have individual pressure relieving devices on each vessel, or connected to any point on the connecting piping, or on any one of the vessels to be protected. Under such an arrangement, there may be a stop valve between any vessel and the pressure relieving devices, and this stop valve need not be locked open, provided it also closes off that vessel from the source of pressure.

AB-105 STOP VALVES ON THE DISCHARGE SIDE OF A PRESSURE RELIEVING DEVICE (SEE RR-210)

A full-area stop valve may be placed on the discharge side of a pressure relieving device when its discharge is connected to a common header with other discharge lines from other pressure relieving devices on nearby vessels that are in operation, so that this stop valve when closed will prevent a discharge from any connected operating vessels from backing up beyond the valve so closed. Such a stop valve should be so arranged that it can be locked or sealed in either the open or closed position, and it should be locked or sealed in either position only by an authorized person. When it is to be closed while the vessel is in operation, an authorized person should be present, and he should remain stationed

Copyright ASME International (BPVC)

there; he should again lock or seal the stop valve in the open position before leaving the station. Under no condition should this valve be closed while the vessel is in operation, except when a stop valve on the inlet side of the safety relieving device is installed and is first closed.

AB-106 DISCHARGE LINES FROM SAFETY DEVICES

(a) Where it is feasible, the use of a short discharge pipe or vertical riser, connected through long-radius elbows from each individual device, blowing directly to the atmosphere, is recommended. Such discharge pipes should be at least of the same size as the valve outlet. Where the nature of the discharge permits, telescopic (sometimes called "broken") discharge lines, whereby condensed vapor in the discharge line, or rain, is collected in a drip pan and piped to a drain, are recommended.[28]

(b) When discharge lines are long, or where outlets of two or more valves having set pressures within a comparable range are connected into a common line, the effect of the back pressure that may be developed therein when certain valves operate must be considered (see RR-220). The sizing of any section of a common-discharge header downstream from each of the two or more pressure relieving devices that may reasonably be expected to discharge simultaneously should be based on the total of their outlet areas, with due allowance for the pressure drop in all downstream sections. Use of specially designed valves suitable for use on high or variable back-pressure service should be considered.

(c) All discharge lines should be run as direct as is practicable to the point of final release for disposal. For the longer lines, due consideration should be given to the advantage of long-radius elbows, avoidance of close-up fittings, and the minimizing of excessive line strains by expansion joints and well known means of support to minimize line-sway and vibration under operating conditions.

NOTE: It is recognized that no simple rule can be applied generally to fit the many installation requirements, which vary from simple short lines that discharge directly into the atmosphere to the extensive manifolded discharge piping systems where the quantity and rate of the product to be disposed of requires piping to a distant safe place.

AB-107 GENERAL ADVISORY INFORMATION ON THE CHARACTERISTICS OF SAFETY RELIEF VALVES DISCHARGING INTO A COMMON HEADER

Because of the wide variety of types and kinds of safety relief valves, it is not considered advisable to attempt a description in this Appendix of the effects produced by discharging them into a common header. Several different types of valves may conceivably be connected to the same discharge header, and the effect of back pressure on each type may be radically different. Data compiled by the Manufacturers of each type of valve used should be consulted for information relative to its performance under the conditions anticipated.

Copyright ASME International (BPVC)

NONMANDATORY APPENDIX AC
DISCONTINUITY STRESSES FOR CLASS II, METHOD B VESSELS

ARTICLE AC-1
EXAMPLES OF DISCONTINUITY STRESSES

AC-100 EXAMPLE ILLUSTRATING THE APPLICATION OF DISCONTINUITY ANALYSIS

Given

A pressure vessel as shown in Figures AC-100.1 and AC-100.2. It is constructed of all mat RTP and subjected to an internal pressure of 15 psi at 300°F. The vessel consists of:

(a) a hemispherical head
inside radius R = 30 in.
thickness t = 0.5 in.
(b) a cylindrical shell
inside radius R = 30 in.
thickness t = 0.5 in.
length L = 10 in.
(c) a flat head
outside radius R = 30.5 in.
thickness t = 6 in.
Material properties assumed:
$E = 10^6$ psi
ν = 0.3

Figure AC-100.1

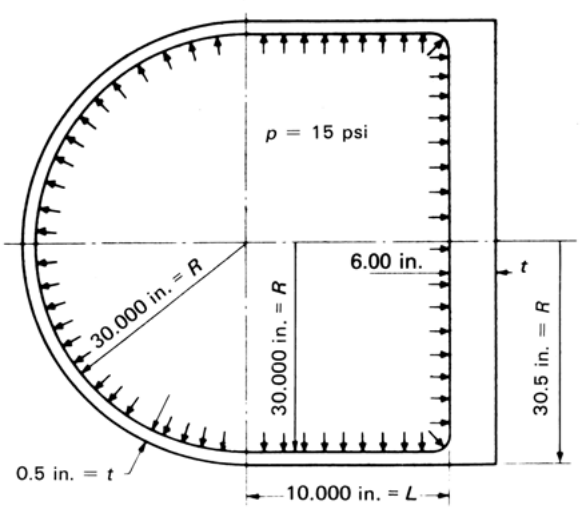

Required

To calculate the discontinuity stresses at the locations of structural discontinuity.

Solution

Step 1. Separate the vessel at locations of discontinuity into individual elements.

Step 2. Calculate the influence coefficients.

(a) Element A, Hemispherical Head:

From Article AC-3, the lateral displacement and rotation at juncture O due to edge loads Q_o and M_o are given as:

$$w_{AO} = \delta_{AO} = -\frac{2R_m\lambda}{Et}Q_o + \frac{2\lambda^2}{Et}M_o$$

$$\theta_{AO} = -\frac{2\lambda^2}{Et}Q_o + \frac{4\lambda^3}{R_mEt}M_o$$

NOTE: For this case of a hemispherical shell, the lateral force H and the radial force Q are equal. Similarly, the lateral displacement δ and the radial displacement w are equal.

Substituting the given dimensions and material properties gives:

$$w_{AO} = \delta_{AO} = -0.000121\,Q_o + 0.000\,M_o$$

$$\theta_{AO} = -0.0004\,Q_o + 0.0002644\,M_o$$

(b) Element B, Cylindrical Shell:

From Article AC-2, AC-230, the radial displacements and rotations at the edges O and L due to edge loadings Q_o, M_o, Q_L, and M_L are given as:[29]

$$W_{BO} = \left(1/2\beta^3D\right)Q_o + \left(1/2\beta^2D\right)M_o$$

Copyright ASME International (BPVC)

Figure AC-100.2

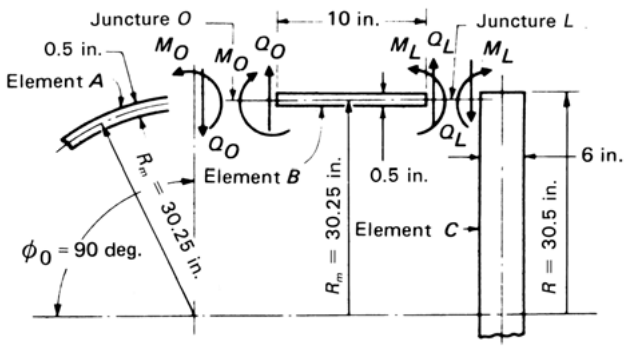

$$-\theta_{BO} = \left(1/2\beta^2 D\right)Q_o + (1/2\beta D)M_o$$

$$w_{BL} = \left(1/2\beta^3 D\right)Q_L + \left(1/2\beta^2 D\right)M_L$$

$$\theta_{BL} = \left(1/2\beta^2 D\right)Q_L + (1/2\beta D)M_L$$

Substituting given dimensions and material properties gives:

$$w_{BO} = (12.097725\ Q_o + 3.9984962\ M_o) \times 10^{-4}$$

$$-\theta_{BO} = (3.9984962\ Q_o + 2.6431369\ M_o) \times 10^{-4}$$

$$W_{BL} = (12.097725\ Q_L + 3.9984962\ M_L) \times 10^{-4}$$

$$\theta_{BL} = (3.9984962\ Q_L + 2.6431369\ M_L) \times 10^{-4}$$

(c) Element C, Flat Head:

From Article AC-4, AC-431.1(b), the radial displacement and rotation at juncture L due to edge loadings Q_L and M_L are given as:

$$w_{CL} = -\frac{2F_3}{3E(t/R)}Q_L + \frac{F_3}{ER(t/R)^2}M_L$$

$$\theta_{CL} = \frac{F_3}{ER(t/R)^2}Q_L - \frac{2F_3}{ER^2(t/R)^3}M_L$$

Substituting given dimensions and material properties gives:

$$w_{CL} = -0.0001452\ Q_L + 0.0004356\ M_L$$

$$\theta_{CL} = 0.0004356\ Q_L + 0.0017424\ M_L$$

Step 3. Calculate the edge deformations due to the internal pressure.

Figure AC-100.3

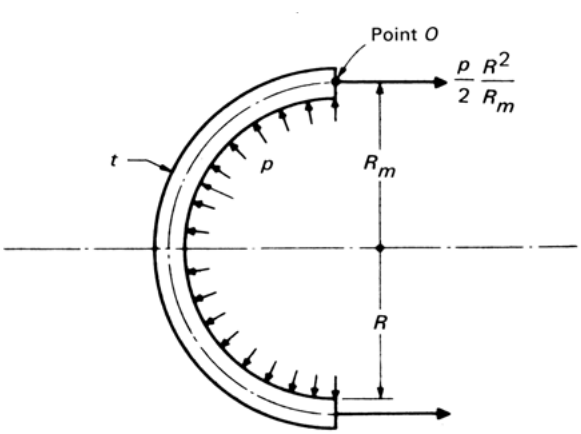

Copyright ASME International (BPVC)

Figure AC-100.4

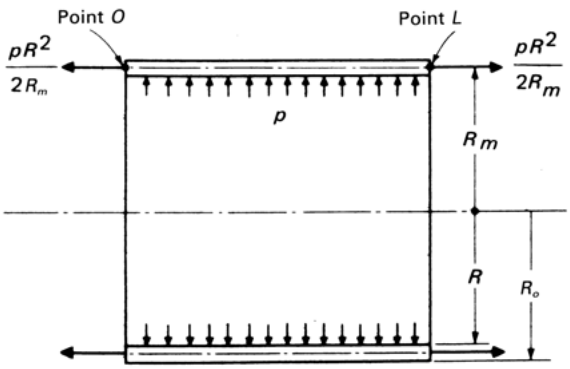

(a) Element A, Hemispherical Shell (See Figure AC-100.3):

The lateral displacement of point O, at the midsurface ($r = R_m$) of a hemispherical shell subjected to internal pressure is given by the expression:

$$w_o = \delta_o = pR^2(1 - \nu)/2Et$$

Substituting the dimensions, pressure, and material properties gives:

$$w_{AO(\text{pressure})} = 0.009767625 \text{ in.}$$

There is no rotation resulting from the internal pressure and membrane forces as shown.

$$\theta_{AO(\text{pressure})} = 0$$

Figure AC-100.5

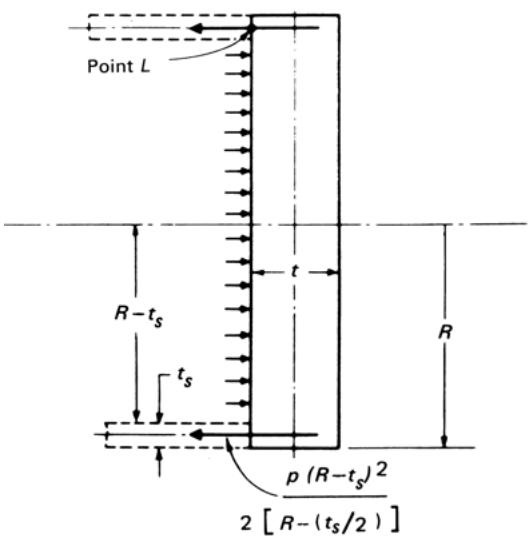

(b) Element B, Cylindrical Shell (see Figure AC-100.4):

The radial displacement of the midsurface of a closed end cylindrical shell subjected to internal pressure is given by the expression:

$$w_{BO} = \left(1 - \frac{\nu}{2}\right)p\frac{RR_m}{Et}$$

Substituting the dimensions, pressure, and material properties gives:

$$w_{BO(\text{pressure})} = w_{BL(\text{pressure})} = 0.02314125 \text{ in.}$$

There is no rotation resulting from internal pressure and the membrane forces shown.

$$\theta_{BO(\text{pressure})} = \theta_{BL(\text{pressure})} = 0$$

(c) Element C, Flat Head (See Figure AC-100.5):

In Article AC-4, AC-431.1, the rotation of a flat head at point L due to internal pressure is given by AC-431.1(a):

$$\theta = \frac{F_1}{E(t/R)^3}p$$

Substituting the dimensions, pressure, and material properties gives:

$$\theta_{CL(\text{pressure})} = 2.006336 \times 10^{-3} \text{ rad}$$

The radial displacement at juncture L is given by AC-431.1(b):

$$w_{CL(\text{pressure})} = -\frac{t}{2}\theta_{CL} = -6.0190092 \times 10^{-3} \text{ in.}$$

Step 4. Calculate the free deformations of the edges of each element caused by temperature distributions.

In this example all parts of the vessel are at the same temperature and are of the same material; therefore, temperature deformations need not be considered.

Step 5. Equate the total lateral displacements and rotations of adjacent elements at each juncture.

Copyright ASME International (BPVC)

(a) Juncture O

$$w_{AO(\text{total})} = w_{BO(\text{total})}$$

$$(-12.097725\,Q_o + 3.9984962\,M_o + 97.67625) \times 10^{-4} = (12.097725\,Q_o + 3.9984962\,M_o + 231.4125) \times 10^{-4} \quad (1)$$

$$\theta_{AO(\text{total})} = \theta_{BO(\text{total})}$$

$$(-3.9984962\,Q_o + 2.6431369\,M_o) \times 10^{-4} = \left(-3.9984962\,Q_o - 2.6431369\,M_o\right) \times 10^{-4} \quad (2)$$

(b) Juncture L

$$w_{BL(\text{total})} = w_{CL(\text{total})}$$

$$(12.097725\,Q_L + 3.9984962\,M_L + 231.4125) \times 10^{-4} = (-0.014036001\,Q_L + 0.03509\,M_L - 60.90082) \times 10^{-4} \quad (3)$$

$$\theta_{BL(\text{total})} = \theta_{CL(\text{total})}$$

$$(3.9984962\,Q_L + 2.6431369\,M_L) \times 10^{-4} = \left(0.03509\,Q_L - 0.01169668\,M_L + 20.063361\right) \times 10^{-4} \quad (4)$$

Combining like terms and multiplying through by 10^4 results in the following system of simultaneous equations which express compatibility at the junctures:

$$24.19545\,Q_o = -133.73625 \quad (5)$$

$$5.2862738\,M_o = 0 \quad (6)$$

$$12.238085\,Q_L + 3.9634062\,M_L = -292.31332 \quad (7)$$

$$3.9634062\,Q_L + 2.6548335\,M_L = 20.063361 \quad (8)$$

Step 6. Solve the above equations for Q_o, M_o, Q_L, and M_L. The results are:

$$Q_o = -5.52733 \text{ lb / in.}$$

$$M_o = 0$$

$$Q_L = -50.98251 \text{ lb / in.}$$

$$M_L = 83.669186 \text{ in.-lb/in.}$$

NOTE: A negative sign indicates that the actual direction of the loading is opposite to that chosen in Step 1.

Step 7. Compute the discontinuity stresses at each juncture due to the redundants Q_o, M_o, Q_L, and M_L.

To illustrate the procedure, these stresses will be computed in the cylindrical shell (element B) at both junctures *O* and *L*.

From AC-240:

$$\sigma_\ell(x) = \pm\, 6M(x) / t^2$$

$$\sigma_t(x) = Ew(x) / (R + t/2) \pm 6\nu M(x) / t^2$$

$$\sigma_r = 0$$

(a) Juncture O. At juncture *O*, $M(x) = M_o$ and $w(x) = w_o$.

NOTE: When computing $\sigma_t(x)$ only the radial displacement due to the redundant shear forces and moments should be used. The free displacements from Steps 3 and 4 should not be included.

$$w_{BO} = (12.097725\,Q_o + 3.9984962\,M_o) \times 10^{-4}$$

$$= -0.006686812 \text{ in.}$$

$$Ew_{BO} = -6686.81 \text{ lb / in.}$$

$$M_o = 0$$

(1) Inside surface

$$\sigma_\ell = 6(0) / (0.5)^2 = 0$$

$$\sigma_t = \frac{-6,686.81}{30.25} + 6(0.3)(0) / (0.5)^2 = -221.05 \text{ psi}$$

$$\sigma_r = 0$$

(2) Outside surface

$$\sigma_\ell = -6(0) / (0.5)^2 = 0$$

$$\sigma_t = \frac{-6,686.81}{30.25} - 6(0.3)(0) / (0.5)^2 = -221.05 \text{ psi}$$

$$\sigma_r = 0$$

(b) Juncture L. At juncture *L*, $M(x) = M_L$ and $w(x) = w_L$.

$$w_{BL} = (12.097725\,Q_L + 3.9984962\,M_L) \times 10^{-4}$$

$$= -0.028222$$

$$Ew_{BL} = -28,222.1 \text{ lb / in.}$$

$$M_L = 83.669186 \text{ in.-lb/in.}$$

(1) Inside surface

$$\sigma_\ell = \frac{6(83.669186)}{(0.5)^2} = 2,008.1 \text{ psi}$$

Copyright ASME International (BPVC)

$$\sigma_t = \frac{-28{,}222.1}{30.25} + \frac{6(0.3)(83.6692)}{(0.5)^2} = -330.54 \text{ psi}$$

$$\sigma_r = 0$$

(2) Outside surface

$$\sigma_\ell = \frac{-6(83.6692)}{(0.5)^2} = -2{,}008.1 \text{ psi}$$

$$\sigma_t = \frac{-28{,}222.1}{30.25} + \frac{6(0.3)(83.6692)}{(0.5)^2} = -2{,}941.02 \text{ psi}$$

$$\sigma_r = 0$$

NOTE: E = 10^6 psi.

(c) The discontinuity stresses in the hemispherical shell may be computed by using the expressions given in AC-331 and AC-333.

(d) The discontinuity stresses in the flat head may be computed using the expressions given in AC-431.2.

Step 8. Compute the total stresses. The total stresses may be computed in any element at any juncture by combining the stresses due to the redundant shear forces and moments, as computed in Step 7, with the stresses resulting from all other loadings. In this case the stresses in the cylindrical shell, hemispherical shell, and flat head due to internal pressure may be computed by the expressions given in AC-211, AC-321, and AC-431.2, respectively. To illustrate the procedure, the total stresses in the cylindrical shell at junctures *O* and *L* will be computed.

The stresses in the cylindrical shell due to internal pressure may be computed from the expressions given in AC-211.

$$\sigma_\ell = pR / 2t$$

$$\sigma_t = pR / t$$

$$\sigma_r = 0$$

(a) Juncture O

(1) Inside surface

$$R = 30.25 \text{ in.}$$

$$p = 15 \text{ psig}$$

$$\sigma_\ell = 453.8 \text{ psi}$$

$$\sigma_t = 907.5 \text{ psi}$$

$$\sigma_r = 0$$

The stresses due to the redundant shear forces and moments were computed in Step 7 as:

$$\sigma_\ell = 0$$

$$\sigma_t = -221.05 \text{ psi}$$

$$\sigma_r = 0$$

The total stresses are:

$$\sigma_\ell = 453.8 + 0 = 453.8 \text{ psi}$$

$$\sigma_t = 907.5 - 221.05 = 686 \text{ psi}$$

$$\sigma_r = 0$$

(2) Outside surface

From pressure:

$$\sigma_\ell = 453.8 \text{ psi}$$

$$\sigma_t = 907.5 \text{ psi}$$

$$\sigma_r = 0$$

The stresses due to the redundant shear forces and moments were computed as:

$$\sigma_\ell = 0$$

$$\sigma_t = -221.05 \text{ psi}$$

$$\sigma_r = 0$$

The total stresses are:

$$\sigma_\ell = 453.8 \text{ psi}$$

$$\sigma_t = 907.5 - 221.05 = 686 \text{ psi}$$

$$\sigma_r = 0$$

(b) Juncture L

(1) Inside surface

The stresses due to the internal pressure are the same as at juncture *O*.

$$\sigma_\ell = 453.8 \text{ psi}$$

$$\sigma_t = 907.5 \text{ psi}$$

$$\sigma_r = 0$$

The stresses due to the redundant shear forces and moments are:

Copyright ASME International (BPVC)

$$\sigma_\ell = \frac{6(83.669)}{(0.5)^2} = 2{,}008 \text{ psi}$$

$$\sigma_t = \frac{-10^6\left(2.8222 \times 10^{-2}\right)}{30.25} + \frac{6(0.3)(83.6692)}{(0.25)^2}$$
$$= 1{,}476 \text{ psi}$$

$$\sigma_r = 0$$

The total stresses are:

$$\sigma_\ell = 453.8 + 2{,}008 = 2{,}462 \text{ psi}$$

$$\sigma_t = 907.5 + 1{,}476 = 2{,}383.5 \text{ psi}$$

$$\sigma_r = 0$$

(2) Outside surface

The stresses due to the internal pressure are the same as at juncture *O*.

$$\sigma_\ell = 453.8 \text{ psi}$$

$$\sigma_t = 907.5 \text{ psi}$$

$$\sigma_r = 0$$

The stresses due to the redundant shear forces and moments are:

$$\sigma_\ell = \frac{-6(83.669)}{(0.5)^2} = -2{,}008 \text{ psi}$$

$$\sigma_t = \frac{-10^6\left(2.8222 \times 10^{-2}\right)}{30.25} - \frac{6(0.3)(83.669)}{(0.25)^2}$$
$$= -3{,}342.6 \text{ psi}$$

$$\sigma_r = 0$$

The total stresses are:

$$\sigma_\ell = 453.8 - 2{,}008 = -1.554 \text{ psi}$$

$$\sigma_t = 907.5 - 3{,}342.6 = -2{,}435.1 \text{ psi}$$

$$\sigma_r = 0$$

Step 9. When evaluating the stresses in accordance with RD-1188.2, the stress intensities at each location should be computed from the total principal stresses determined in Step 8.

Copyright ASME International (BPVC)

ARTICLE AC-2
EXAMPLES OF STRESS ANALYSIS OF CYLINDRICAL SHELLS

AC-200 SIGN CONVENTION AND NOMENCLATURE

The symbols and sign convention (see Figure AC-200) adopted in this Appendix for the analysis of cylindrical shells are defined as follows:

B_{11} = $B_{11}(\beta L)$
= $(\sinh 2\beta L - \sin 2\beta L)\ /2(\sinh^2 \beta L - \sin^2 \beta L)$
B_{12} = $B_{12}(\beta L)$
= $(\cosh 2\beta L - \cos 2\beta L)\ /2(\sinh^2 \beta L - \sin^2 \beta L)$
B_{22} = $B_{22}(\beta L)$
= $(\sinh 2\beta L + \sin 2\beta L)/(\sinh^2 \beta L - \sin^2 \beta L)$
D = $Et^3/12\ (1 - \nu^2)$, lb-in.
E = modulus of elasticity, psi
$f_1(\beta x)$ = $e^{-\beta x} \cos \beta x$
$f_2(\beta x)$ = $e^{-\beta x} (\cos \beta x - \sin \beta x)$
$f_3(\beta x)$ = $e^{-\beta x} (\cos \beta x + \sin \beta x)$
$f_4(\beta x)$ = $e^{-\beta x} \sin \beta x$
$F_{11}(\beta x)$ = $(\cosh \beta x \sin \beta x - \sinh \beta x \cos \beta x)/2$
$F_{12}(\beta x)$ = $\sinh \beta x \sin \beta x$
$F_{13}(\beta x)$ = $(\cosh \beta x \sin \beta x + \sinh \beta x \cos \beta x)/2$
$F_{14}(\beta x)$ = $\cosh \beta x \cos \beta x$
G_{11} = $G_{11}(\beta L)$
= $-(\cosh \beta L \sin \beta L - \sinh \beta L \cos \beta L)/(\sinh^2 \beta L - \sin^2 \beta L)$
G_{12} = $G_{12}(\beta L)$
= $-2 \sinh \beta L \sin \beta L/(\sinh^2 \beta L - \sin^2 \beta L)$
G_{22} = $G_{22}(\beta L)$
= $-2\ (\cosh \beta L \sin \beta L + \sinh \beta L \cos \beta L)/(\sinh^2 \beta L - \sin^2 \beta L)$
L = length of cylinder, in.; subscript to denote evaluation of a quantity at end of cylinder removed from reference end
M = longitudinal bending moment per unit length of circumference, in.-lb/in.
o = subscript to denote evaluation of a quantity at reference end of cylinder, $x = 0$
p = internal pressure, psi
Q = radial shearing forces per unit length of circumference, lb/in.
R = inside radius, in.
S = stress intensity, psi
t = thickness of cylinder, in.
w = radial displacement of cylinder wall, in.
x = axial distance measured from the reference end of cylinder, in.
Y = ratio of outside radius to inside radius
Z = ratio of outside radius to an intermediate radius
β = $[3(1 - \nu^2)/(R + t/2)^2 t^2]^{1/4}$, in.$^{-1}$
θ = rotation of cylinder wall, rad
= dw/dx
ν = Poisson's ratio
σ_r = radial stress component, psi
σ_t = tangential (circumferential) stress component, psi
σ_ℓ = longitudinal (meridional) stress component, psi

Figure AC-200
Symbols and Sign Convention

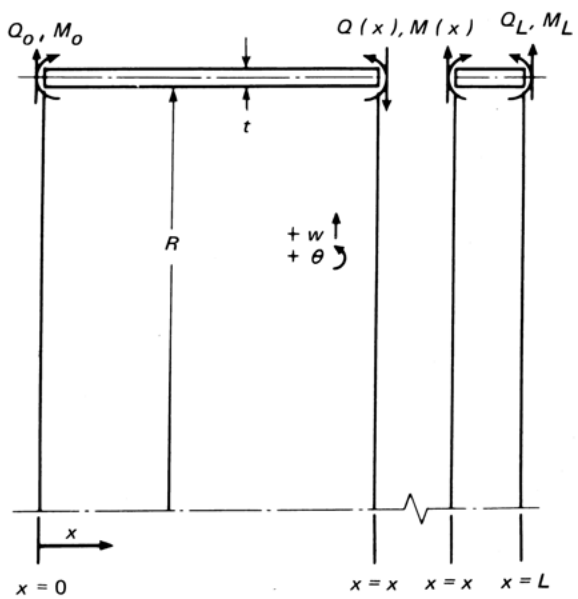

GENERAL NOTE: The sign convention arbitrarily chosen for the analysis of cylindrical shells in this Appendix is as indicated in this figure. Positive directions assumed for pertinent quantities are indicated.

Copyright ASME International (BPVC)

AC-210 PRINCIPAL STRESSES AND STRESS INTENSITIES DUE TO INTERNAL PRESSURE

The equations for principal stresses and stress intensities presented in this paragraph include the loading effects of internal pressure only and exclude the effects of all structural discontinuities.

AC-211 PRINCIPAL STRESSES

The principal stresses developed at any point in the wall of a cylindrical shell due to internal pressure are given by the equations:

$$\sigma_1 = \sigma_t = p\left(1 + Z^2\right)/(Y^2 - 1) \quad (1)$$

$$\sigma_2 = \sigma_\ell = p/(Y^2 - 1) \quad (2)$$

$$\sigma_3 = \sigma_r = p(1 - Z^2)/(Y^2 - 1) \quad (3)$$

AC-212 STRESS INTENSITIES

(a) The general primary membrane stress intensity developed across the thickness of a cylindrical shell due to internal pressure is given by the equation:

$$S = \frac{pR}{t} + \frac{p}{2} \quad (1)$$

(b) The maximum value of the primary-plus-secondary stress intensity developed at any point across the thickness of a cylindrical shell due to internal pressure occurs at the inside surface and is given by the equation:

$$S = 2pY^2/(Y^2 - 1) \quad (2)$$

(c) Note that in evaluating the general primary membrane stress intensity, the average value of the radial stress has been taken as $(-p/2)$. This has been done to obtain a result consistent with burst pressure analyses. On the other hand, the radial stress value used in (b) is $(-p)$, the value at the inner surface, since the purpose of that quantity is to control local behavior.

AC-220 BENDING ANALYSIS FOR UNIFORMLY DISTRIBUTED EDGE LOADS

The equations in this paragraph describe the behavior of a cylindrical shell when subjected to the action of bending moments M, in.-lb/in. of circumference, and radial shearing forces Q, lb/in. of circumference, uniformly distributed at the edges and acting at the mean radius of the shell. The behavior of the shell due to all other loadings must be evaluated independently and combined by superposition.

AC-230 DISPLACEMENTS, BENDING MOMENTS, AND SHEARING FORCES IN TERMS OF CONDITIONS AT REFERENCE EDGE, $x = 0$

(a) The radial displacement $w(x)$, the angular displacement or rotation $\theta(x)$, the bending moments $M(x)$, and the radial shearing forces $Q(x)$at any axial location of the cylinder are given by the following equations in terms of w_o, θ_o, M_o, and Q_o:

$$w(x) = \left(Q_o/2\beta^3D\right)F_{11}(\beta x) + \left(M_o/2\beta^2D\right)F_{12}(\beta x) + (\theta_o/\beta)F_{13}(\beta x) + w_oF_{14}(\beta x) \quad (1)$$

$$\theta(x)/\beta = \left(Q_o/2\beta^3D\right)F_{12}(\beta x) + 2\left(M_o/2\beta^2D\right)F_{13}(\beta x) + (\theta_o/\beta)F_{14}(\beta x) - 2w_oF_{11}(\beta x) \quad (2)$$

$$M(x)/2\beta^2D = \left(Q_o/2\beta^3D\right)F_{13}(\beta x) + \left(M_o/2\beta^2D\right)F_{14}(\beta x) - (\theta_o/\beta)F_{11}(\beta x) - w_oF_{12}(\beta x) \quad (3)$$

$$Q(x)/2\beta^3D = \left(Q_o/2\beta^3D\right)F_{14}(\beta x) - 2\left(M_o/2\beta^2D\right)F_{11}(\beta x) - (\theta_o/\beta)F_{12}(\beta x) - 2w_oF_{13}(\beta x) \quad (4)$$

(b) In the case of cylinders of sufficient length, the equations in (a) above reduce to those given below. These equations may be used for cylinders characterized by lengths not less than $3/\beta$. The combined effects of loadings at the two edges may be evaluated by applying the equations to the loadings at each edge, separately, and superposing the results.

$$w(x) = \left(Q_o/2\beta^3D\right)f_1(\beta x) + \left(M_o/2\beta^2D\right)f_2(\beta x) \quad (1)$$

$$\theta(x)/\beta = -\left(Q_o/2\beta^3D\right)f_3(\beta x) - 2\left(M_o/2\beta^2D\right)f_1(\beta x) \quad (2)$$

$$M(x)/2\beta^2D = \left(Q_o/2\beta^3D\right)f_4(\beta x) + \left(M_o/2\beta^2D\right)f_3(\beta x) \quad (3)$$

Copyright ASME International (BPVC)

$$Q(x) / 2\beta^3 D = \left(Q_o / 2\beta^3 D\right) f_2(\beta x) - 2\left(M_o / 2\beta^2 D\right) f_4(\beta x) \quad (4)$$

AC-231 EDGE DISPLACEMENTS AND ROTATIONS IN TERMS OF EDGE LOADS

(a) The radial displacements w_o and w_L and rotations θ_o and $-\theta_L$ developed at the edges of a cylindrical shell sustaining the action of edge loads Q_o, M_o, Q_L, and M_L are given by the following equations:

$$w_o = \left(B_{11} / 2\beta^3 D\right) Q_o + \left(B_{12} / 2\beta^2 D\right) M_o + \left(G_{11} / 2\beta^3 D\right) Q_L + \left(G_{12} / 2\beta^2 D\right) M_L \quad (1)$$

$$-\theta_o = \left(B_{12} / 2\beta^2 D\right) Q_o + (B_{22} / 2\beta D) M_o + \left(G_{12} / 2\beta^2 D\right) Q_L + (G_{22} / 2\beta D) M_L \quad (2)$$

$$w_L = \left(G_{11} / 2\beta^3 D\right) Q_o + \left(G_{12} / 2\beta^2 D\right) M_o + \left(B_{11} / 2\beta^3 D\right) Q_L + \left(B_{12} / 2\beta^2 D\right) M_L \quad (3)$$

$$\theta_L = \left(G_{12} / 2\beta^2 D\right) Q_o + (G_{22} / 2\beta D) M_o + \left(B_{12} / 2\beta^2 D\right) Q_L + (B_{22} / 2\beta D) M_L \quad (4)$$

(b) The influence functions, B's and G's, appearing in the equations, (a) above, rapidly approach limiting values as the length L of the cylinder increases. The limiting values are:

$$B_{11} = B_{12} = 1$$

$$B_{22} = 2$$

$$G_{11} = G_{12} = G_{22} = 0$$

(1) Thus for cylindrical shells of sufficient length, the loading conditions prescribed at one edge do not influence the displacements at the other edge.

(2) In the case of cylindrical shells characterized by lengths not less than $3/\beta$, the influence functions, B's and G's, are sufficiently close to the limiting values that the limiting values may be used in the equations, (a) above, without significant error.

(c) In the case of sufficiently short cylinders, the influence functions, B's and G's, appearing in the equations, (a) above, are, to a first approximation, given by the following expressions:

$$B_{11} = 2 / \beta L$$

$$B_{12} = 3 / (\beta L)^2$$

$$B_{22} = 6 / (\beta L)^3$$

$$G_{11} = -1 / \beta L$$

$$G_{12} = -3 / (\beta L)^2$$

$$G_{22} = -6 / (\beta L)^3$$

Introducing these expressions for the influence functions, B's and G's, into the equations, (a) above, yields expressions identical to those obtained by the application of ring theory. Accordingly, the resultant expressions are subject to all of the limitations inherent in the ring theory, including the limitations due to the assumption that the entire cross-sectional area of the ring, $t \times L$, rotates about its centroid without distortion. Nevertheless, in the analysis of very short cylindrical shells characterized by lengths not greater than $0.5/\beta$, the expressions may be used without introducing significant error.

AC-240 PRINCIPAL STRESSES DUE TO BENDING

The principal stresses developed at the surfaces of a cylindrical shell at any axial location x due to uniformly distributed edge loads (see Figure AC-200) are given by the equations:

$$\sigma_1 = \sigma_t(x) = Ew(x) / (R + t/2) \pm 6\nu M(x) / t^2 \quad (1)$$

$$\sigma_2 = \sigma_\ell(x) = \pm 6M(x) / t^2 \quad (2)$$

$$\sigma_3 = \sigma_r = 0 \quad (3)$$

In these equations, where terms are preceded by a double sign (±), the upper sign refers to the inside surface of the cylinder and the lower sign refers to the outside surface.

Copyright ASME International (BPVC)

ARTICLE AC-3
EXAMPLES OF STRESS ANALYSIS OF SPHERICAL SHELLS

AC-300 SCOPE

(a) In this Article, equations are given for stresses and deformations in spherical shells subjected to internal or external pressure.

(b) Equations are also given for bending analysis of partial spherical shells under the action of uniformly distributed edge forces and moments.

AC-310 NOMENCLATURE AND SIGN CONVENTION

The symbols and sign convention adopted in this Article are defined as follows:

A_o = $\sqrt{1 + k_1^2}$

$B(at\ \alpha)$ = $[(1 + \nu^2)(K_1 + K_2) - 2K_2]$

$C(at\ \alpha)$ = $\sqrt{\sin \phi_o / \sin (\phi_o - \alpha)}$

D = flexural rigidity, in.-lb
= $Et^3/12(1 - \nu^2)$

E = modulus of elasticity, psi

$F(at\ \alpha)$ = $\sqrt{\sin (\phi_o) \sin (\phi_o - \alpha)}$

H = force per unit length of circumference, perpendicular to center line of sphere, lb/in.

K_1 = $1 - \frac{1 - 2\nu}{2\lambda} \cot (\phi_o - \alpha)$

k_1 = $1 - \frac{1 - 2\nu}{2\lambda} \cot \phi_o$

K_2 = $1 - \frac{1 + 2\nu}{2\lambda} \cot (\phi_o - \alpha)$

k_2 = $1 - \frac{1 + 2\nu}{2\lambda} \cot \phi_o$

M = meridional bending moment per unit length of circumference, in.-lb/in.

N = membrane force, lb/in.

o = subscript to denote a quantity at reference edge of sphere

p = uniform pressure, internal or external, psi

Q = radial shearing force per unit of circumference, lb/in.

R = inside radius, in.

R_m = radius of midsurface of spherical shell, in.

S = stress intensity, psi

t = as a subscript, used to denote circumferential direction

t = thickness of spherical shell, in.

U = ratio of inside radius to an intermediate radius

w = radial displacement of midsurface, in.

x = length of arc for angle α, measured from reference edge of hemisphere
= $R_m\alpha$, in.

Y = ratio of outside radius to inside radius

Z = ratio of outside radius to an intermediate radius

ℓ = subscript to denote meridional direction

α = meridional angle measured from the reference edge, rad

β = $\left[3\left(1 - \nu^2\right) / R_m^2 t^2\right]^{1/4}$, 1/in.

γ_o = $\tan^{-1} (-k_1)$, rad

δ = lateral displacement of midsurface, perpendicular to center line of spherical shell, in.

θ = rotation of midsurface, rad

λ = βR_m

ν = Poisson's ratio

σ_r = radial stress component, psi

σ_t = tangential (circumferential) stress component, psi

σ_ℓ = longitudinal (meridional) stress component, psi

ϕ = meridional angle measured from center line of sphere, rad

ϕ_L = meridional angle of second edge, rad

ϕ_o = meridional angle of reference edge where loading is applied, rad

The sign convention is listed below and shown in Figure AC-310 by the positive directions of the pertinent quantities.

H, H_o = force perpendicular to Ł, positive outward

M, M_o = moment, positive when causing tension on the inside surface

N_t, N_ℓ = membrane force, positive when causing tension

p = pressure, positive radially outward

δ = lateral displacement, perpendicular to Ł of sphere, positive outward

θ = rotation, positive when accompanied by an increase in the radius or curvature, as caused by a positive moment

Copyright ASME International (BPVC)

Figure AC-310

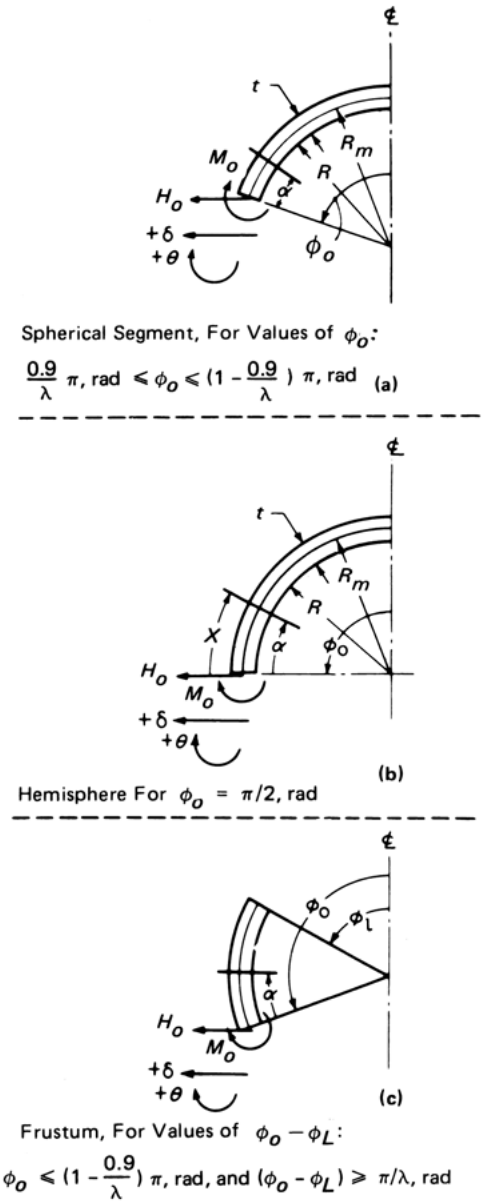

AC-320 PRINCIPAL STRESSES AND STRESS INTENSITIES RESULTING FROM INTERNAL OR EXTERNAL PRESSURE

In this paragraph equations are given for principal stresses and stress intensities resulting from uniformly distributed internal or external pressure in complete or partial spherical shells. The effects of discontinuities in geometry and loading are not included and should be evaluated independently. The stresses resulting from all effects must be combined by superposition.

AC-321 PRINCIPAL STRESSES RESULTING FROM INTERNAL PRESSURE

The principal stresses at any point in the wall of a spherical shell are given by the following equations:

$$\sigma_1 = \sigma_\ell = p\left(Z^3 + 2\right)/2(Y^3 - 1) \quad (1)$$

$$\sigma_2 = \sigma_t = p\left(Z^3 + 2\right)/2(Y^3 - 1) \quad (2)$$

$$\sigma_3 = \sigma_r = p(1 - Z^3)/(Y^3 - 1) \quad (3)$$

AC-322 STRESS INTENSITIES RESULTING FROM INTERNAL PRESSURE

(a) The average primary stress intensity in a spherical shell resulting from internal pressure is given by the equation:

$$S_{\text{avg}} = 0.75p\left(Y^3 + 1\right)/(Y^3 - 1)$$

(b) The maximum value of the stress intensity in a spherical shell resulting from internal pressure occurs at the inside surface and is given by the equation:

$$S_{\text{max}} = 1.5pY^3/(Y^3 - 1)$$

AC-323 PRINCIPAL STRESSES RESULTING FROM EXTERNAL PRESSURE

The principal stresses at any point in the wall of a spherical shell resulting from external pressure are given by the following equations:

$$\sigma_1 = \sigma_\ell = -pY^3\left(U^3 + 2\right)/2(Y^3 - 1) \quad (1)$$

$$\sigma_2 = \sigma_t = -pY^3\left(U^3 + 2\right)/2(Y^3 - 1) \quad (2)$$

$$\sigma_3 = \sigma_r = pY^3\left(U^3 - 1\right)/(Y^3 - 1) \quad (3)$$

AC-324 STRESS INTENSITIES RESULTING FROM EXTERNAL PRESSURE

(a) The average primary stress intensity in a spherical shell resulting from external pressure is given by the equation:

$$S_{\text{avg}} = 0.75p\left(Y^3 + 1\right)/(Y^3 - 1)$$

(b) The maximum value of the stress intensity in a spherical shell resulting from external pressure occurs at the inside surface and is given by the equation:

Copyright ASME International (BPVC)

$$S_{\max} = 1.5\,pY^3/(Y^3 - 1)$$

NOTE: The equations in AC-323 and AC-324 may be used only if the applied external pressure is less than the critical pressure which would cause instability of the spherical shell. The value of the critical pressure must be evaluated in accordance with the rules given in Article RD-3.

AC-330 BENDING ANALYSIS FOR UNIFORMLY DISTRIBUTED EDGE LOADS

(a) The equations in this paragraph describe the behavior of partial spherical shells of the types shown in Figure AC-310, when subjected to the action of meridional bending moment M_o (in.-lb/in. of circumference) and forces H_o (in.-lb/in. of circumference), uniformly distributed at the reference edge and acting at the mean radius of the shell. The effects of all other loading must be evaluated independently and combined by superposition.

(b) The equations listed in this paragraph become less accurate and should be used with caution when R_m/t is less than 10 and/or the opening angle limitations shown in Figure AC-310 are exceeded.

AC-331 DISPLACEMENT, ROTATION, MOMENT, AND MEMBRANE FORCE IN TERMS OF LOADING CONDITIONS AT REFERENCE EDGE

The displacement δ, rotation θ, bending moments M_ℓ and M_t, and membrane forces N_ℓ and N_t at any location of sphere are given in terms of the edge loads M_o and H_o by the following equations:

$$\begin{aligned}\delta = {} & M_o\left\{\frac{2\lambda^2}{Etk_1}F(\text{at }\alpha)e^{-\lambda\alpha}\left[\cos(\lambda\alpha) - K_2\sin(\lambda\alpha)\right]\right\} \\ & + H_o\left\{\frac{R_m\lambda}{Etk_1}A_o\sin\phi_o\,F(\text{at }\alpha)e^{-\lambda\alpha}\right. \\ & \left.\times\left[\cos(\lambda\alpha + \gamma_o) - K_2\sin(\lambda\alpha + \gamma_o)\right]\right\}\end{aligned} \quad (1)$$

$$\begin{aligned}\theta = {} & M_o\left\{\frac{4\lambda^3}{R_mEtk_1}C(\text{at }\alpha)e^{-\lambda\alpha}\cos(\lambda\alpha)\right\} \\ & + H_o\left\{\frac{2\lambda^2}{Etk_1}A_o\sin\phi_o\,C(\text{at }\alpha)e^{-\lambda\alpha}\right. \\ & \left.\times\cos(\lambda\alpha + \gamma_o)\right\}\end{aligned} \quad (2)$$

$$\begin{aligned}M_\ell = {} & M_o\left\{\frac{1}{k_1}C(\text{at }\alpha)e^{-\lambda\alpha}\left[K_1\cos(\lambda\alpha) + \sin(\lambda\alpha)\right]\right\} \\ & + H_o\left\{\frac{R_m}{2\lambda k_1}A_o\sin\phi_o\,C(\text{at }\alpha)e^{-\lambda\alpha}\right. \\ & \left.\times\left[K_1\cos(\lambda\alpha + \gamma_o) + \sin(\lambda\alpha + \gamma_o)\right]\right\}\end{aligned} \quad (3)$$

$$\begin{aligned}N_\ell = {} & -M_o\left\{\frac{2\lambda}{R_mk_1}C(\text{at }\alpha)e^{-\lambda\alpha}\sin(\lambda\alpha)\cot(\phi_o - \alpha)\right\} \\ & -H_o\left\{\frac{1}{k_1}A_o\cot(\phi_o - \alpha)\sin\phi_o\,C(\text{at }\alpha)e^{-\lambda\alpha}\right. \\ & \left.\times\sin(\lambda\alpha + \gamma_o)\right\}\end{aligned} \quad (4)$$

$$\begin{aligned}N_t = {} & M_o\left\{\frac{2\lambda^2}{R_mk_1}C(\text{at }\alpha)e^{-\lambda\alpha}\right. \\ & \left.\times\left[\cos(\lambda\alpha) - \left(\frac{K_1 + K_2}{2}\right)\sin(\lambda\alpha)\right]\right\} \\ & + H_o\left\{\frac{\lambda}{k_1}A_o\sin\phi_o\,C(\text{at }\alpha)e^{-\lambda\alpha}\right. \\ & \left.\times\left[\cos(\lambda\alpha + \gamma_o) - \left(\frac{K_1 + K_2}{2}\right)\right.\right. \\ & \left.\left.\sin(\lambda\alpha + \gamma_o)\right]\right\}\end{aligned} \quad (5)$$

AC-332 DISPLACEMENT AND ROTATION OF REFERENCE EDGE IN TERMS OF LOADING CONDITIONS AT REFERENCE EDGE

(a) At the reference edge $\alpha = 0$, and $\phi = \phi_o$. The equations for the displacement and rotation (see AC-331) simplify to those given below:

$$\delta_o = M_o\frac{2\lambda^2\sin\phi_o}{Etk_1} + H_o\frac{R_m\lambda\sin^2\phi_o}{Et}\left(\frac{1}{k_1} + k_2\right) \quad (1)$$

$$\theta_o = M_o\frac{4\lambda^3}{R_mEtk_1} + H_o\frac{2\lambda^2\sin\phi_o}{Etk_1} \quad (2)$$

(b) In the case where the shell under consideration is a full hemisphere, eqs. (a)(1) and (a)(2) above reduce to those given below:

$$\delta_o = M_o\frac{2\lambda^2}{Et} + H_o\frac{2R_m\lambda}{Et} \quad (1)$$

$$\theta_o = M_o\frac{4\lambda^3}{R_mEt} + H_o\frac{2\lambda^2}{Et} \quad (2)$$

AC-333 PRINCIPAL STRESSES IN SPHERICAL SHELLS RESULTING FROM EDGE LOADS

The principal stresses at the inside and outside surfaces of a spherical shell at any location, resulting from edge loads M_o and H_o, are given by the following equations:

$$\sigma_1 = \sigma_\ell(\text{at }\alpha) = \frac{N_\ell}{t} \pm \frac{6M_\ell}{t^2} \quad (1)$$

Copyright ASME International (BPVC)

$$\sigma_2 = \sigma_t(\text{at}\,\alpha) = \frac{N_t}{t} \pm \frac{6M_t}{t^2} \quad (2)$$

$$\sigma_3 = \sigma_r(\text{at}\,\alpha) = 0 \quad (3)$$

In these equations, where terms are preceded by a double sign (±), the upper sign refers to the inside surface of the shell and the lower sign refers to the outside surface.

AC-340 ALTERNATE BENDING ANALYSIS OF A HEMISPHERICAL SHELL SUBJECTED TO UNIFORMLY DISTRIBUTED EDGE LOADS

If a less exacting but more expedient analysis of hemispherical shells is required, equations derived for cylindrical shells may be used in a modified form. The equations listed in this paragraph describe the behavior of a hemispherical shell as approximated by a cylindrical shell of the same radius and thickness when subjected to the action of uniformly distributed edge loads M_o and H_o at $\alpha = 0$, $x = 0$, and $\phi_o = 90$ deg = π/2 rad.

AC-341 DISPLACEMENT ROTATION, MOMENT, AND SHEAR FORCES IN TERMS OF LOADING CONDITIONS AT EDGE

$$\delta_o = H_o / 2\beta^3 D + M_o / 2\beta^2 D \quad (1)$$

$$\theta_o = H_o / 2\beta^2 D + M_o / \beta D \quad (2)$$

$$\delta(x) = \frac{H_o \sin^2 \phi}{2\beta^3 D} f_1(\beta x) + \frac{M_o \sin \phi}{2\beta^2 D} f_2(\beta x) \quad (3)$$

$$\theta(x) = \frac{H_o \sin \phi}{2\beta^2 D} f_3(\beta x) + \frac{M_o}{\beta D} f_1(\beta x) \quad (4)$$

$$M(x) = \frac{H_o \sin \phi}{\beta} f_4(\beta x) + M_o f_3(\beta x) \quad (5)$$

$$Q(x) = H_o \sin \phi f_2(\beta x) - 2\beta M_o f_4(\beta x) \quad (6)$$

where f_1, f_2, f_3, and f_4 are defined in Article AC-2 and

$$x = \alpha R_m = (\pi / 2 - \phi) R_m$$

AC-342 PRINCIPAL STRESSES IN A HEMISPHERICAL SHELL DUE TO EDGE LOADS

The principal stresses in a hemispherical shell, due to edge loads M_o and H_o, at the inside and outside surfaces of a hemispherical shell at any meridional location, are given by the equations:

$$\sigma_1 = \sigma_\ell(\text{at}\,x) = \pm 6M(\text{at}\,x) / t^2 \quad (1)$$

$$\sigma_2 = \sigma_t(\text{at}\,x) = E\delta(x) / R_m \pm \nu 6M(\text{at}\,x) / t^2 \quad (2)$$

$$\sigma_3 = \sigma_r(\text{at}\,x) = 0 \quad (3)$$

In these equations, where terms are preceded by a double sign (±), the upper sign refers to the inside surface of the hemisphere and the lower sign refers to the outside surface.

AC-343 LAYERED SPHERICAL SHELL AND HEAD FORMULAS

The equations developed for solid wall spherical shells or heads as expressed in this Article may be applied to layered spherical shells or heads provided that the shell or head is constructed to prevent slip between the layers in the area of discontinuity.

Copyright ASME International (BPVC)

ARTICLE AC-4
EXAMPLES OF STRESS ANALYSIS OF FLAT CIRCULAR HEADS

AC-400 SCOPE

(a) In this Article, equations are given for stresses and displacements in flat circular plates used as heads for pressure vessels.

(b) Equations are also given for stresses and displacements in these heads due to forces and edge moments uniformly distributed along the outer edge and uniformly distributed over a circle on one face. The radius of this circle is intended to match the mean radius of an adjoining element such as a cylinder, cone, or spherical segment.

AC-410 NOMENCLATURE AND SIGN CONVENTION

The symbols and sign conventions adopted in this Article are defined as follows:

E = elastic modulus, psi
F = geometry constant given in Table AC-440.1
M = radial bending moment, in.-lb/in. of circumference
p = pressure, psi
Q = radial force, lb/in. of circumference
R = outside radius of plate, in.
r = radial distance from center of plate, in.
t = thickness of plate
t_s = thickness of connecting shell at the head junction, in.
w = radial displacement, in.
x = longitudinal distance from midplane of plate, in.
θ = rotation, rad
ν = Poisson's ratio
σ_r = radial stress, psi
σ_t = tangential (circumferential) stress, psi
σ_ℓ = longitudinal stress, psi

Tensile stresses are positive. The positive directions of the coordinates, radial forces, moments, and displacements are shown in Figure AC-410. The pressure is assumed to act on the surface where $x = -t/2$.

AC-420 PRESSURE AND EDGE LOADS ON CIRCULAR FLAT PLATES

In the following paragraphs equations are given for the principal stress and the deformations of flat plates under axisymmetric loading conditions.

AC-421 PRESSURE LOADS ON SIMPLY SUPPORTED FLAT PLATES

The principal stresses and deformations for a flat plate, simply supported at its periphery and loaded in the manner shown in Figure AC-421, are given for a radial location r at any point x in the cross section by the following equations.

Radial bending stress

$$\sigma_r = p\frac{3(x)}{4t^3}\left[(3+\nu)\left(R^2-r^2\right)\right] \quad (1)$$

Tangential bending stress

$$\sigma_t = p\frac{3(x)}{4t^3}\left[(3+\nu)R^2-(1+3\nu)r^2\right] \quad (2)$$

Longitudinal stress

$$\sigma_\ell = \frac{p}{t}\left(x-\frac{t}{2}\right) \quad (3)$$

Rotation of the midplane

$$\theta = -p\frac{3(1-\nu)}{4t^3E}\left[r^3(1+\nu)-rR^2(3+\nu)\right] \quad (4)$$

Rotation of the midplane at the outer edge

$$\theta = +p\frac{3(1-\nu)}{2E}\left(\frac{R}{t}\right)^3 \quad (5)$$

Radial displacement

$$w = +(x)\theta \quad (6)$$

AC-422 EDGE LOADS ON FLAT PLATES

The principal stresses and deformations of a flat plate subjected to uniformly distributed edge loads, as shown in Figure AC-422, are given for radial location r at any point x in the cross section by the following equations:

Radial and tangential stresses

$$\sigma_r = \sigma_t = \frac{Q}{t}-\frac{12(x)}{t^3}M \quad (1)$$

Rotation of the midplane

Copyright ASME International (BPVC)

Figure AC-410

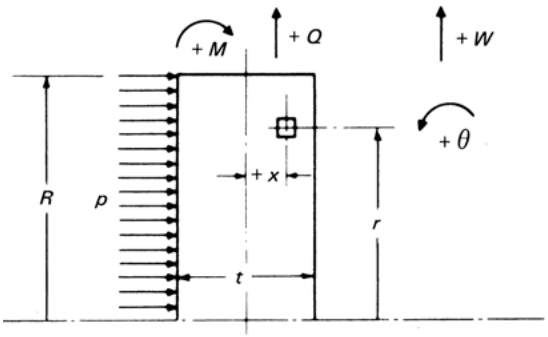

Figure AC-421

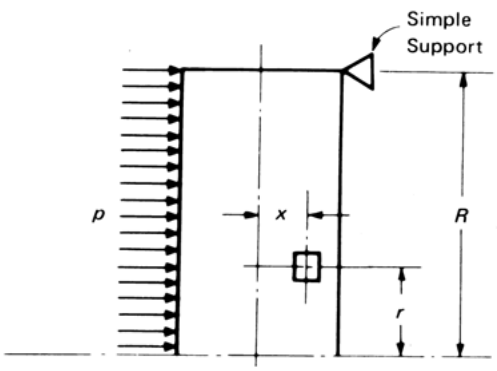

Figure AC-422

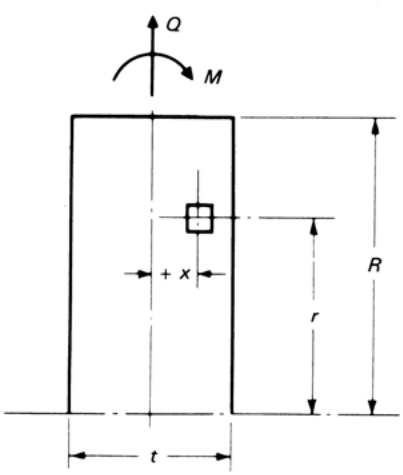

$$\theta = \frac{-12(1-v)(r)}{Et^3}M \quad (2)$$

Radial displacement

$$w = \frac{(1-v)(r)}{Et}Q + (x)\theta \quad (3)$$

AC-430 FLAT PLATE PRESSURE VESSEL HEADS

Flat plates used as pressure vessel heads are attached to a vessel shell in the manner shown by the typical examples in Figure AC-430.

Since the support conditions at the edge of the plate depend upon the flexibility of the adjoining shell, the stress distribution in the plate is influenced by the shell thickness and geometry. The structure formed by the head and the shell may be analyzed according to the principles of discontinuity analysis described in Article AC-1. In the following paragraph equations are given for the quantities necessary to perform a discontinuity analysis.

AC-431 DISPLACEMENTS AND PRINCIPAL STRESSES IN A FLAT HEAD

The head is assumed to be separated from the adjoining shell element and under the action of the pressure load. Figure AC-431 illustrates this condition. The effects of the adjacent shell are represented by the pressure reaction force, the discontinuity force Q, and the discontinuity moment M. These act at the assumed junction point (a). The pressure acts on the left-hand face over a circular area defined by the inside radius of the adjacent shell. The support point lies on this same face at the midradius of the adjacent shell. The equations in this paragraph are given in terms of the head dimensions R and t and multiplying factors F_1 to F_4. These factors reflect the

Figure AC-430

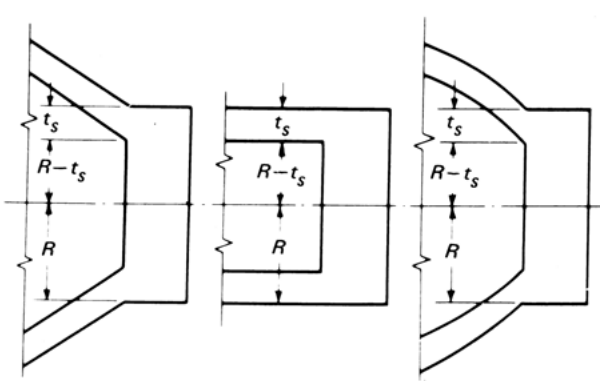

Copyright ASME International (BPVC)

Figure AC-431

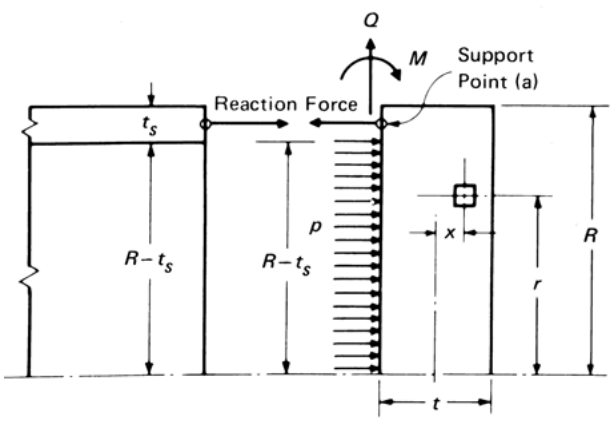

extent of the pressure area and the location of the junction point. The numerical values for F_1 to F_4 are given in Table AC-440.1. These are functions of the ratio of the shell thickness t_s to the head radius R.

AC-431.1 Displacements of a Flat Head.

(a) For a plate simply supported at a point (a), the rotational displacement θ_p and the radial displacement w_p of point (a) due to pressure p acting over the area defined by the radius $(R - t_s)$ are given by the following equations:

$$\theta_p = + \frac{F_1}{E(t/R)^3} p \tag{1}$$

$$w_p = - \frac{t}{2}\theta_p \tag{2}$$

(b) The rotational displacements θ and the radial displacement w of point (a) due to a uniformly distributed radial force Q and moment M acting at point (a) are given by the following equations:

$$\theta = \frac{-F_3}{ER(t/R)^2} Q + \frac{-2F_3}{ER^2(t/R)^3} M \tag{3}$$

$$w = \frac{2F_3}{3E(t/R)} Q + \frac{F_3}{ER(t/R)^2} M \tag{4}$$

AC-431.2 Principal Stresses in a Flat Head. When the values of the discontinuity force Q and the moment M have been determined by a discontinuity analysis, the principal stresses in a flat plate can be calculated as follows:

(a) For a plate simply supported at point (a), the radial stress σ_r for a radial location r less than $(R - t_s)$ at any point x due to pressure p acting over the area defined by the radius $(R - t_s)$ is given by the following equation:

$$\sigma_r = \frac{xp}{t(t/R)^2}\left[F_2 - \frac{3(3 + \nu)r^2}{4R^2}\right] \tag{1}$$

(b) For these same conditions, the tangential stress σ_t and the axial stress σ_ℓ are given by the following equations:

$$\sigma_t = \frac{xp}{t(t/R)^2}\left[F_2 - \frac{3(1 + 3\nu)r^2}{4R^2}\right] \tag{2}$$

$$\sigma_\ell = \left(x - \frac{t}{2}\right)\frac{p}{t} \tag{3}$$

(c) The radial stress σ_r and the tangential stress σ_t for any radial location at any point x in the cross section, due to uniformly distributed radial force Q and a uniformly distributed moment M acting at point (a), are given by the equation:

$$\sigma_r = \sigma_t = \frac{F_4}{t}\left[1 - \frac{6(x)}{t}\right]Q - \frac{12F_4(x)}{t^3}M \tag{4}$$

AC-440 GEOMETRY CONSTANTS

The geometry constants F_1 through F_4 are functions of Poisson's ratio and t_s/R. These are:

$$F_1 = \frac{3(1-\nu)\left(2-f^2\right)(1-f)^2[8-f(4-f)(1-\nu)]}{16(2-f)}$$

$$F_2 = \frac{3}{8}(1 - f)^2\left\{(1 - \nu)\left(2 - f^2\right) + 4(1 + \nu)\left[1 + 2\left(\ln\frac{2 - f}{2 - 2f}\right)\right]\right\}$$

$$F_3 = \frac{3}{8}(1 - \nu)(2 - f)[8 - f(4 - f)(1 - \nu)]$$

$$F_4 = \frac{1}{8}[8 - f(4 - f)(1 - \nu)]$$

In these expressions

$$f = t_s / R$$

Table AC-440.1 lists these functions for various values of t_s/R. These tabular values have been computed using 0.3 for Poisson's ratio.

Copyright ASME International (BPVC)

Table AC-440.1

t_s/R	F_1	F_2	F_3	F_4
0.00	1.0500	2.4750	4.2000	1.0000
0.02	1.0113	2.4149	4.1290	0.9930
0.04	0.9730	2.3547	4.0589	0.9861
0.06	0.9350	2.2943	3.9897	0.9793
0.08	0.8975	2.2339	3.9214	0.9726
0.10	0.8604	2.1734	3.8538	0.9659
0.12	0.8238	2.1129	3.7872	0.9593
0.14	0.7878	2.0524	3.7213	0.9527
0.16	0.7523	1.9920	3.6563	0.9462
0.18	0.7174	1.9316	3.5920	0.9398
0.20	0.6831	1.8713	3.5286	0.9335

AC-450 STRESS INTENSITIES IN A FLAT PLATE

The principal stresses due to pressure p, discontinuity force Q, discontinuity moment M, and other coincident loadings should be combined algebraically and the stress differences determined according to the procedures of RD-1182. The calculated stress intensity values should not exceed the allowable values given in RD-1187.

Copyright ASME International (BPVC)

NONMANDATORY APPENDIX AD
LAMINATE THEORY

AD-100 SCOPE

Laminate theory is defined as a mathematical treatment of the mechanics governing the behavior of a unidirectional orthotropic lamina, and the interrelation between multiple lamina as they act together to form a multidirectional laminate. As addressed in this Appendix, laminate theory shall be used to:

(a) determine the in-plane and flexural modulus components that define the stress–strain and moment–curvature relationships for laminates;

(b) examine the strength of the laminate based on the strain state of individual lamina reacting to imposed moment and stress resultants;

(c) determine the effective engineering constants of the laminates.

As an illustrative example, a twelve ply laminate, having the lamina properties, ply orientation, stacking sequence, and imposed loads shown in Figure AD-500, shall be examined.

AD-200 STANDARD NOTATION

The following conventions are observed for ply numbering and reference axis.

AD-201 LOCATION AND NUMBERING OF PLIES

A multidirectional general laminate is represented diagrammatically in Figure AD-201. Ply numbering is from $Z = -h/2$ to $Z = h/2$, with ply No. 1 at the bottom.

AD-202 REFERENCE AXIS

Coordinate reference axis designation is illustrated in Figure AD-202.

Figure AD-201

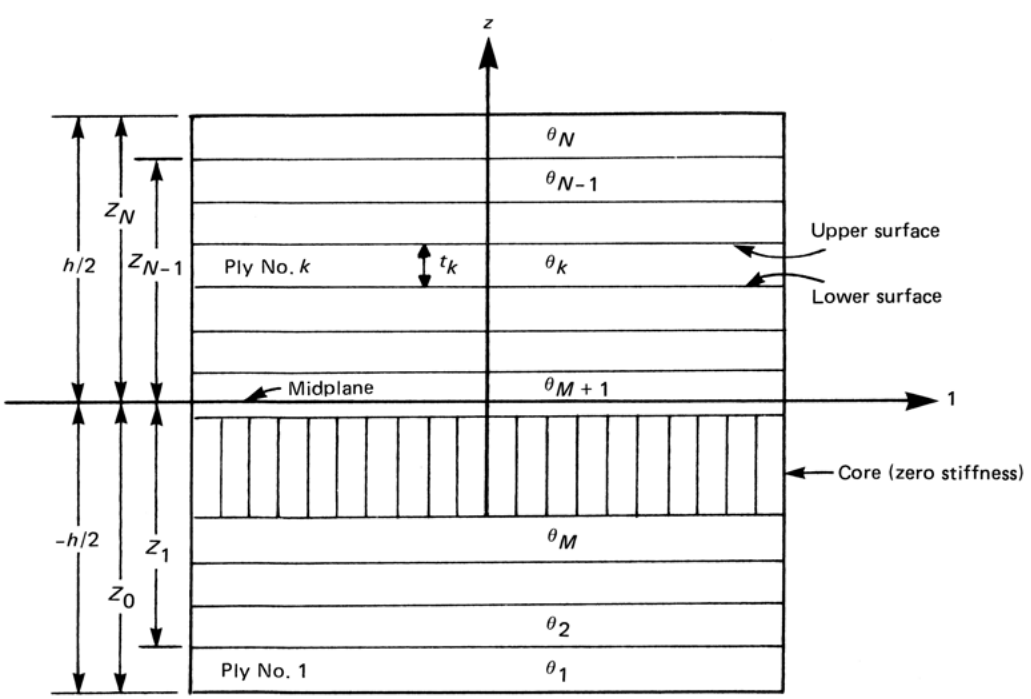

Copyright ASME International (BPVC)

Figure AD-202
Reference Coordinates

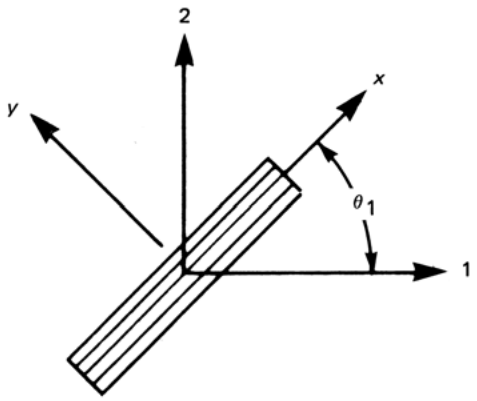

GENERAL NOTES:
(a) x, y are on-axis coordinates.
(b) 1, 2 are laminate (off-axis) coordinates.

on-axis: refers to the principal orientation of the fibers of a specific laminate and is referenced as the x–y axis: x being parallel to the fibers, y being transverse to the fibers.

off-axis: refers to the principal material axis of the laminate and is referenced as the 1–2 axis. As referenced in this Appendix, the 1 axis is the vessel or nozzle longitudinal axis, and the 2 axis is the hoop or circumferential axis.

AD-300 BASIC ASSUMPTIONS

In the application of laminate theory as used in this Section, certain assumptions are made:

(a) interlaminar or transverse shear is not addressed;

(b) laminate stress resultants and moment resultants are taken as averages of ply stresses across the thickness of the laminate;

(c) ply stress is based on homogeneity within each ply where the fiber and matrix are not recognized as distinct phases;

(d) the laminate is assumed to consist of perfectly bonded lamina, i.e., displacements are continuous across laminate boundaries and no lamina slips relative to another;

(e) since the stress distribution across a multidirectional laminate is not constant due to the variation in ply modulus, the stress–strain relationship is defined in terms of an average stress.

AD-310 NOMENCLATURE

Refer to Article RD-12.

AD-400 LAMINA (PLY) PROPERTIES (19)

Laminate theory as applied in this Section requires that four elastic constants and five strength constants be determined for the orthotropic lamina. The strength constants shall be determined by the appropriate ASTM standard listed in Article RT-7. The elastic constants shall be determined in accordance with Article RT-7 or Nonmandatory Appendix AK. For the illustrative example, they shall be assumed to be as shown in Table AD-500.

(a) Elastic constants required are:
E_s = longitudinal shear modulus
E_x = longitudinal tensile modulus
E_y = transverse tensile modulus
ν_x = longitudinal Poisson's ratio

(b) Strength constants required are:
S = longitudinal shear strength
X = longitudinal tensile strength
X_c = longitudinal compressive strength
Y = transverse tensile strength
Y_c = transverse compressive strength

(c) Physical constants required are:
h = laminate thickness
t_k = thickness of each layer
Z_k = distance from laminate midplane to ply surface

AD-500 ILLUSTRATIVE EXAMPLE

Figure AD-500 and Table AD-500 describe a general laminate, with core, to be used for this example.

The loads applied to the laminate are taken to be the equivalent of a 50 psi internal pressure on a 30 in. inside diameter cylindrical shell.

Stress Resultants	Moment Resultants
N_1 = 375 lb/in.	M_1 = 0
N_2 = 750 lb/in.	M_2 = 0
N_6 = 0	M_6 = 0

AD-501 DETERMINATION OF STIFFNESS MATRIX

The modulus components that define the stress–strain and moment–curvature relationships for a general laminate are expressed in general terms as follows:

$$A_{ij} = \int Q_{ij} dz \quad (1)$$

$$B_{ij} = \int Q_{ij} z \, dz \quad (2)$$

$$D_{ij} = \int Q_{ij} z^2 \, dz \quad (3)$$

Copyright ASME International (BPVC)

Figure AD-500

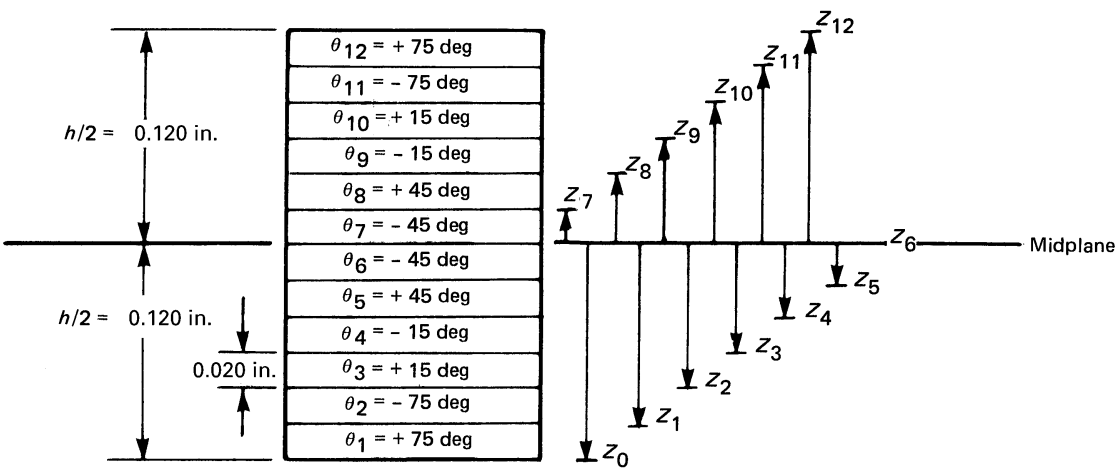

Table AD-500
Assumed Lamina Elastic and Strength Properties

Property	Assumed Value
E_x	5.100×10^6 psi
E_y	1.525×10^6 psi
E_s	0.439×10^6 psi
ν_x	0.281
t_k	0.020 in.
X	119,000 psi
Y	10,000 psi
X_C	119,000 psi
Y_C	10,000 psi
S	5,220 psi
ν_y [Note (1)]	0.084

NOTE: (1) $\nu_y = E_y\nu_x/E_x$

The following outline may be used to solve for the integrals and determine the modulus components of an anisotropic laminate from the orthotropic properties, orientation, and stacking sequence of the individual lamina.

AD-501.1 Determine On-Axis Modulus Components of the Lamina. From the lamina elastic constants:

$$Q_{xx} = E_x / \left(1 - \nu_x\nu_y\right) = 5.223 \times 10^6 \text{ psi} \quad (4)$$

$$Q_{yy} = E_y / \left(1 - \nu_x\nu_y\right) = 1.561 \times 10^6 \text{ psi} \quad (5)$$

$$Q_{yx} = E_y\nu_x / \left(1 - \nu_x\nu_y\right) = 0.438 \times 10^6 \text{ psi} \quad (6)$$

$$Q_{xy} = Q_{yx} = 0.438 \times 10^6 \text{ psi} \quad (7)$$

$$Q_{ss} = E_s = 0.439 \times 10^6 \text{ psi} \quad (8)$$

AD-501.2 Determination of Transformed Modulus Components. Based on the orientation of each ply, calculate the transformed modulus components of each lamina using the transformation equations shown below and the on-axis modulus components determined in AD-501.1.

The transformed modulus components in terms of their power functions and on-axis components are shown below.

$$Q_{11} = Q_{xx}\cos^4\theta + Q_{yy}\sin^4\theta + 2Q_{xy}\cos^2\theta\sin^2\theta + 4Q_{ss}\cos^2\theta\sin^2\theta$$

$$Q_{12} = Q_{xx}\cos^2\theta\sin^2\theta + Q_{yy}\cos^2\theta\sin^2\theta + Q_{xy}\left(\cos^4\theta + \sin^4\theta\right) - 4Q_{ss}\cos^2\theta\sin^2\theta$$

$$Q_{16} = Q_{xx}\cos^3\theta\sin\theta - Q_{yy}\cos\theta\sin^3\theta + Q_{xy}\left(\cos\theta\sin^3\theta - \cos^3\theta\sin\theta\right) + 2Q_{ss}\left(\cos\theta\sin^3\theta - \cos^3\theta\sin\theta\right)$$

$$Q_{21} = Q_{12}$$

Copyright ASME International (BPVC)

$$Q_{22} = Q_{xx}\sin^4\theta + Q_{yy}\cos^4\theta + 2Q_{xy}\cos^2\theta\sin^2\theta + 4Q_{ss}\cos^2\theta\sin^2\theta$$

$$Q_{26} = Q_{xx}\cos\theta\sin^3\theta - Q_{yy}\cos^3\theta\sin\theta + Q_{xy}\left(\cos^3\theta\sin\theta - \cos\theta\sin^3\theta\right) + 2Q_{ss}\left(\cos^3\theta\sin\theta - \cos\theta\sin^3\theta\right)$$

$$Q_{61} = Q_{16}$$

$$Q_{62} = Q_{26}$$

$$Q_{66} = Q_{xx}\cos^2\theta\sin^2\theta + Q_{yy}\cos^2\theta\sin^2\theta - 2Q_{xy}\cos^2\theta\sin^2\theta + Q_{ss}\left(\cos^2\theta - \sin^2\theta\right)$$

However, by the substitutions of certain trigonometric identities, multiple angle functions can be developed that offer certain advantages in the calculations. These will be used in the illustrative example:

$$\mu_1 = \frac{1}{8}\left(3Q_{xx} + 3Q_{yy} + 2Q_{xy} + 4Q_{ss}\right) = 2.87 \times 10^6 \text{ psi} \quad (9)$$

$$\mu_2 = \frac{1}{2}\left(Q_{xx} - Q_{yy}\right) = 1.83 \times 10^6 \text{ psi} \quad (10)$$

$$\mu_3 = \frac{1}{8}\left(Q_{xx} + Q_{yy} - 2Q_{xy} - 4Q_{ss}\right) = 0.518 \times 10^6 \text{ psi} \quad (11)$$

$$\mu_4 = \frac{1}{8}\left(Q_{xx} + Q_{yy} + 6Q_{xy} - 4Q_{ss}\right) = 0.957 \times 10^6 \text{ psi} \quad (12)$$

$$\mu_5 = \frac{1}{8}\left(Q_{xx} + Q_{yy} - 2Q_{xy} + 4Q_{ss}\right) = 0.957 \times 10^6 \text{ psi} \quad (13)$$

The substitution of the trigonometric identities into the transformation relations yields the following values for ply No. 1.

$$Q_{11} = \mu_1 + \mu_2\cos 2\theta + \mu_3\cos 4\theta = 1.55 \times 10^6 \text{ psi} \quad (14)$$

$$Q_{12} = \mu_4 - \mu_3\cos 4\theta = 0.698 \times 10^6 \text{ psi} \quad (15)$$

$$Q_{16} = \frac{1}{2}\mu_2\sin 2\theta + \mu_3\sin 4\theta = 0.0083 \times 10^6 \text{ psi} \quad (16)$$

$$Q_{21} = Q_{12} = 0.698 \times 10^6 \text{ psi} \quad (17)$$

$$Q_{22} = \mu_1 - \mu_2\cos 2\theta + \mu_3\cos 4\theta = 4.72 \times 10^6 \text{ psi} \quad (18)$$

$$Q_{26} = \frac{1}{2}\mu_2\sin 2\theta - \mu_3\sin 4\theta = 0.907 \times 10^6 \text{ psi} \quad (19)$$

$$Q_{61} = Q_{16} = 0.0083 \times 10^6 \text{ psi} \quad (20)$$

$$Q_{62} = Q_{26} = 0.907 \times 10^6 \text{ psi} \quad (21)$$

$$Q_{66} = \mu_5 - \mu_3\cos 4\theta = 0.698 \times 10^6 \text{ psi} \quad (22)$$

The transformed modulus components for all 12 plies are determined in similar fashion and listed in Table AD-501.

AD-501.3 Determination of In-Plane Modulus Components. The in-plane modulus components A_{ij} that couple stress to strain are determined from an arithmetic summation of the off-axis modulus of each lamina as a function of the distance of each lamina from the laminate midplane.

$$A_{11} = \sum (Q_{11})_k (Z_k - Z_{k-1}) = (Q_{11})_{01}(Z_1 - Z_0) + (Q_{11})_{02}(Z_2 - Z_1) + \ldots + (Q_{11})_{012}(Z_{12} - Z_{11}) \quad (23)$$

$$A_{11} = \sum (Q_{11})_k (Z_k - Z_{k-1}) = 6.90 \times 10^5 \text{ lb/in.}$$

$$A_{12} = \sum (Q_{12})_k (Z_k - Z_{k-1}) = 2.30 \times 10^5 \text{ lb/in.}$$

$$A_{16} = \sum (Q_{16})_k (Z_k - Z_{k-1}) = 0$$

$$A_{21} = \sum (Q_{21})_k (Z_k - Z_{k-1}) = 2.30 \times 10^5 \text{ lb/in.}$$

$$A_{22} = \sum (Q_{22})_k (Z_k - Z_{k-1}) = 6.90 \times 10^5 \text{ lb/in.}$$

$$A_{26} = \sum (Q_{26})_k (Z_k - Z_{k-1}) = 0$$

Copyright ASME International (BPVC)

Table AD-501
Transformed Modulus Components, 10^6 psi

Ply No.	Q_{11}	Q_{12}	Q_{16}	Q_{21}	Q_{22}	Q_{26}	Q_{61}	Q_{62}	Q_{66}
1	1.547	0.698	0.0083	0.698	4.718	0.907	0.0083	0.907	0.698
2	1.547	0.698	−0.0083	0.698	4.718	−0.907	−0.0083	−0.907	0.698
3	4.718	0.698	0.907	0.698	1.547	0.0083	0.907	0.0083	0.698
4	4.718	0.698	−0.907	0.698	1.547	−0.0083	−0.907	−0.0083	0.698
5	2.354	1.476	0.915	1.476	2.354	0.915	0.915	0.915	1.476
6	2.354	1.476	−0.915	1.476	2.354	−0.915	−0.915	−0.915	1.476
7	2.354	1.476	−0.915	1.476	2.354	−0.915	−0.915	−0.915	1.476
8	2.354	1.476	0.915	1.476	2.354	0.915	0.915	0.915	1.476
9	4.718	0.698	−0.907	0.698	1.547	−0.0083	−0.907	−0.0083	0.698
10	4.718	0.698	0.907	0.698	1.547	0.0083	0.907	0.0083	0.698
11	1.547	0.698	−0.0083	0.698	4.718	−0.907	−0.0083	−0.907	0.698
12	1.547	0.698	0.0083	0.698	4.718	0.907	0.0083	0.907	0.698

$$A_{61} = \sum (Q_{61})_k (Z_k - Z_{k-1}) = 0$$

$$A_{62} = \sum (Q_{62})_k (Z_k - Z_{k-1}) = 0$$

$$A_{66} = \sum (Q_{66})_k (Z_k - Z_{k-1}) = 2.30 \times 10^5 \text{ lb / in.}$$

AD-501.4 Determination of Coupling Modulus Components. The coupling modulus components B_{ij} that couple moment to strain and stress to curvature are determined from a summation of the off-axis modulus of the individual lamina as a function of the square of the distance of the lamina from the laminate midplane.

$$\begin{aligned} B_{11} = {} & \frac{1}{2} \sum (Q_{11})_k \left(Z_k^2 - Z_{k-1}^2\right) \\ & \frac{1}{2}\Big[(Q_{11})_{\theta 1}\left(Z_1^2 - Z_0^2\right) \\ & + (Q_{11})_{\theta 2}\left(Z_2^2 - Z_1^2\right) + \cdots \\ & + (Q_{11})_{\theta 12}\left(Z_{12}^2 - Z_{11}^2\right)\Big] \end{aligned} \tag{24}$$

$$B_{11} = \frac{1}{2} \sum (Q_{11})_k \left(Z_k^2 - Z_{k-1}^2\right) = 0 \text{ lb}$$

$$B_{12} = \frac{1}{2} \sum (Q_{12})_k \left(Z_k^2 - Z_{k-1}^2\right) = 0 \text{ lb}$$

$$B_{16} = \frac{1}{2} \sum (Q_{16})_k \left(Z_k^2 - Z_{k-1}^2\right) = 0 \text{ lb}$$

$$B_{21} = \frac{1}{2} \sum (Q_{21})_k \left(Z_k^2 - Z_{k-1}^2\right) = 0 \text{ lb}$$

$$B_{22} = \frac{1}{2} \sum (Q_{22})_k \left(Z_k^2 - Z_{k-1}^2\right) = 0 \text{ lb}$$

$$B_{26} = \frac{1}{2} \sum (Q_{26})_k \left(Z_k^2 - Z_{k-1}^2\right) = 0 \text{ lb}$$

$$B_{61} = \frac{1}{2} \sum (Q_{61})_k \left(Z_k^2 - Z_{k-1}^2\right) = 0 \text{ lb}$$

$$B_{62} = \frac{1}{2} \sum (Q_{62})_k \left(Z_k^2 - Z_{k-1}^2\right) = 0 \text{ lb}$$

$$B_{66} = \frac{1}{2} \sum (Q_{66})_k \left(Z_k^2 - Z_{k-1}^2\right) = 0 \text{ lb}$$

AD-501.5 Determination of Flexural Modulus Components. The flexural modulus components D_{ij} that couple moments to curvature are determined from a summation of the off-axis modulus of the individual lamina as a function of the cube of the distance of the lamina from the laminate midplane.

$$\begin{aligned} D_{11} = {} & \frac{1}{3} \sum (Q_{11})_k \left(Z_k^3 - Z_{k-1}^3\right) \\ = {} & \frac{1}{3}\Big[(Q_{11})_{\theta 1}\left(Z_1^3 - Z_0^3\right) \\ & + (Q_{11})_{\theta 2}\left(Z_2^3 - Z_1^3\right) + \cdots \\ & + (Q_{11})_{\theta 12}\left(Z_{12}^3 - Z_{11}^3\right)\Big] \end{aligned} \tag{25}$$

$$\begin{aligned} D_{11} = {} & \frac{1}{3} \sum (Q_{11})_k \left(Z_k^3 - Z_{k-1}^3\right) \\ = {} & 2.76 \times 10^3 \text{ lb-in.} \end{aligned}$$

Copyright ASME International (BPVC)

$$D_{12} = \frac{1}{3}\sum (Q_{12})_k \left(Z_k^3 - Z_{k-1}^3\right) = 8.38 \times 10^2 \text{ lb-in.}$$

$$D_{16} = \frac{1}{3}\sum (Q_{16})_k \left(Z_k^3 - Z_{k-1}^3\right) = 1.18 \times 10^2 \text{ lb-in.}$$

$$D_{21} = \frac{1}{3}\sum (Q_{21})_k \left(Z_k^3 - Z_{k-1}^3\right) = 8.38 \times 10^2 \text{ lb-in.}$$

$$D_{22} = \frac{1}{3}\sum (Q_{22})_k \left(Z_k^3 - Z_{k-1}^3\right) = 4.39 \times 10^3 \text{ lb-in.}$$

$$D_{26} = \frac{1}{3}\sum (Q_{26})_k \left(Z_k^3 - Z_{k-1}^3\right) = 1.75 \times 10^2 \text{ lb-in.}$$

$$D_{61} = \frac{1}{3}\sum (Q_{61})_k \left(Z_k^3 - Z_{k-1}^3\right) = 1.18 \times 10^2 \text{ lb-in.}$$

$$D_{62} = \frac{1}{3}\sum (Q_{62})_k \left(Z_k^3 - Z_{k-1}^3\right) = 1.75 \times 10^2 \text{ lb-in.}$$

$$D_{66} = \frac{1}{3}\sum (Q_{66})_k \left(Z_k^3 - Z_{k-1}^3\right) = 8.38 \times 10^2 \text{ lb-in.}$$

AD-502 NORMALIZED MODULUS COMPONENTS

It is often convenient to work with normalized units. For this example, the stiffness matrix, stress resultants, and moment resultants will be normalized. (Superscript * denotes normalized unit.

$$A_{11}^* = A_{11}/h = 2.87 \times 10^6 \text{ psi}$$

$$A_{12}^* = A_{12}/h = 9.58 \times 10^5 \text{ psi}$$

$$A_{16}^* = A_{16}/h = 0$$

$$A_{21}^* = A_{21}/h = 9.58 \times 10^5 \text{ psi}$$

$$A_{22}^* = A_{22}/h = 2.87 \times 10^6 \text{ psi}$$

$$A_{26}^* = A_{26}/h = 0$$

$$A_{61}^* = A_{61}/h = 0$$

$$A_{62}^* = A_{62}/h = 0$$

$$A_{66}^* = A_{66}/h = 9.58 \times 10^6 \text{ psi}$$

$$B_{11}^* = 2B_{11}/h^2 = 0$$

$$B_{12}^* = 2B_{12}/h^2 = 0$$

$$B_{16}^* = 2B_{16}/h^2 = 0$$

$$B_{21}^* = 2B_{21}/h^2 = 0$$

$$B_{22}^* = 2B_{22}/h^2 = 0$$

$$B_{26}^* = 2B_{26}/h^2 = 0$$

$$B_{61}^* = 2B_{61}/h^2 = 0$$

$$B_{62}^* = 2B_{62}/h^2 = 0$$

$$B_{66}^* = 2B_{66}/h^2 = 0$$

$$D_{11}^* = 12D_{11}/h^3 = 2.40 \times 10^6 \text{ psi}$$

$$D_{12}^* = 12D_{12}/h^3 = 7.27 \times 10^5 \text{ psi}$$

$$D_{16}^* = 12D_{16}/h^3 = 1.02 \times 10^5 \text{ psi}$$

$$D_{21}^* = 12D_{21}/h^3 = 7.27 \times 10^5 \text{ psi}$$

$$D_{22}^* = 12D_{22}/h^3 = 3.81 \times 10^6 \text{ psi}$$

$$D_{26}^* = 12D_{26}/h^3 = 1.52 \times 10^5 \text{ psi}$$

$$D_{61}^* = 12D_{61}/h^3 = 1.02 \times 10^5 \text{ psi}$$

$$D_{62}^* = 12D_{62}/h^3 = 1.52 \times 10^5 \text{ psi}$$

$$D_{66}^* = 12D_{66}/h^3 = 7.27 \times 10^5 \text{ psi}$$

$$N_1^* = N_1/h = 1{,}562 \text{ psi}$$

Copyright ASME International (BPVC)

Figure AD-503

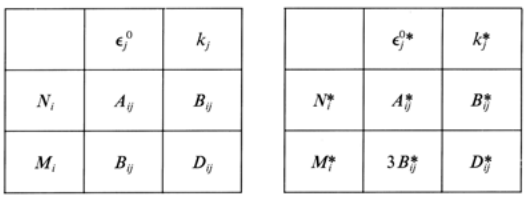

(a) Stiffness Matrix

(b) Normalized Stiffness Matrix

$$N_2^* = N_2 / h = 3{,}125 \text{ psi}$$

$$N_6^* = N_6 / h = 0$$

$$M_1^* = M_1 / \left(h^2 / 6\right) = 0$$

$$M_2^* = M_2 / \left(h^2 / 6\right) = 0$$

$$M_6^* = M_6 / \left(h^2 / 6\right) = 0$$

AD-503 STIFFNESS MATRIX FORMAT

The stiffness matrix will take one of the formats shown in Figure AD-503, depending on whether the matrix is normalized or not.

AD-504 DETERMINATION OF COMPLIANCE

Compliance is the reciprocal of modulus and is obtained from a matrix inversion of the stiffness matrix. The matrix inversion is best done using a digital computer, but complies with the following inversion process.

In-plane compliance

$$\alpha = A^{-1} + A^{-1}B\left(D - BA^{-1}B\right)^{-1}BA^{-1}$$

Coupling compliance

$$\beta = -A^{-1}B\left(D - BA^{-1}B\right)^{-1}BA^{-1}$$

Flexural compliance

$$\delta = \left(D - BA^{-1}B\right)^{-1}$$

AD-505 COMPLIANCE MATRIX FORMAT

The compliance matrix will take one of the formats shown in Figure AD-505, depending on whether the matrix is normalized or not.

AD-506 MATRICES FOR ILLUSTRATIVE EXAMPLE

The complete stiffness and compliance matrices for the illustrative example are listed in Table AD-506.

AD-507 STRAIN ANALYSIS

It is necessary to determine both on-axis and off-axis interlaminar strains resulting from imposed loads on the laminate. Begin by assuming a linear strain variation across the laminate thickness and calculate the off-axis strains at the lower and upper surface of each ply. On-axis strains at the ply surfaces are then determined from the off-axis strains using the transformation relations.

AD-507.1 Determination of Off-Axis Strains.

From the normalized compliance matrix, determine the laminate strains and curvatures resulting from the imposed loads. (The choice of compliance or normalized compliance is the designer's option.)

$$\begin{aligned}\epsilon_1^{0*} &= \alpha_{11}{}^*N_1{}^* + \alpha_{12}{}^*N_2{}^* + \alpha_{16}{}^*N_6{}^* \\ &\quad + \tfrac{1}{3}\beta_{11}{}^{*T}M_1{}^* + \tfrac{1}{3}\beta_{12}{}^{*T}M_2{}^* + \tfrac{1}{3}\beta_{16}{}^{*T}M_6{}^* \\ &= 0.000204\end{aligned} \tag{26}$$

$$\begin{aligned}\epsilon_2^{0*} &= \alpha_{21}{}^*N_1{}^* + \alpha_{22}{}^*N_2{}^* + \alpha_{26}{}^*N_6{}^* \\ &\quad + \tfrac{1}{3}\beta_{21}{}^{*T}M_1{}^* + \tfrac{1}{3}\beta_{22}{}^{*T}M_2{}^* + \tfrac{1}{3}\beta_{26}{}^{*T}M_6{}^* \\ &= 0.001019\end{aligned} \tag{27}$$

$$\begin{aligned}\epsilon_6^{0*} &= \alpha_{61}{}^*N_1{}^* + \alpha_{62}{}^*N_2{}^* + \alpha_{66}{}^*N_6{}^* \\ &\quad + \tfrac{1}{3}\beta_{61}{}^{*T}M_1{}^* + \tfrac{1}{3}\beta_{62}{}^{*T}M_2{}^* + \tfrac{1}{3}\beta_{66}{}^{*T}M_6{}^* \\ &= 0.0\end{aligned} \tag{28}$$

$$\begin{aligned}k_1^* &= \beta_{11}{}^{*T}N_1{}^* + \beta_{12}{}^{*T}N_2{}^* + \beta_{16}{}^{*T}N_6{}^* \\ &\quad + \delta_{11}{}^*M_1{}^* + \delta_{12}{}^*M_2{}^* + \delta_{16}{}^*M_6{}^* \\ &= 0.0\end{aligned} \tag{29}$$

Figure AD-505

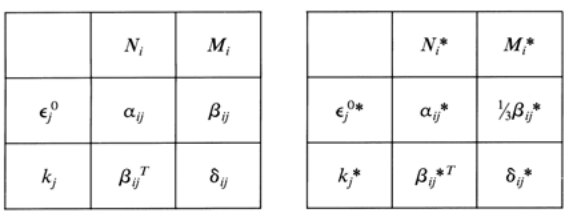

(a) Compliance Matrix

(b) Normalized Compliance Matrix

Copyright ASME International (BPVC)

Table AD-506
Matrices for Illustrative Example

Normalized Stiffness Matrix, psi					
		A^*	B^*		
		$3B^*$	D^*		
2.874 E+06	9.578 E+05	0.000 E+00	7.830 E−10	2.711 E−10	2.823 E−18
9.578 E+05	2.874 E+06	0.000 E+00	2.711 E−10	7.228 E−10	−1.506 E−11
0.000 E+00	0.000 E+00	9.579 E+05	2.823 E−12	−1.506 E−11	2.485 E−10
2.349 E−09	8.132 E−10	8.470 E−18	2.400 E+06	7.272 E+05	1.022 E+05
8.132 E−10	2.168 E−09	−4.518 E−11	7.272 E+05	3.809 E+06	1.521 E+05
8.470 E−12	−4.518 E−11	7.454 E−10	1.022 E+05	1.521 E+05	7.273 E+05
Normalized Compliance Matrix, 1/psi					
		α^*	$\frac{1}{3}\beta^*$		
		β^{*T}	δ^*		
3.915 E−07	−1.305 E−07	−2.297 E−39	−3.976 E−23	6.424 E−24	3.341 E−24
−1.305 E−07	3.915 E−07	−6.279 E−39	6.173 E−24	−2.311 E−23	6.668 E−24
−1.546 E−39	−6.466 E−39	1.044 E−06	3.020 E−24	5.610 E−24	−1.205 E−22
−1.192 E−22	1.933 E−23	8.485 E−24	4.438 E−07	−8.292 E−08	−4.500 E−08
1.850 E−23	−6.935 E−23	2.052 E−23	−8.292 E−08	2.802 E−07	−4.696 E−08
1.037 E−23	1.659 E−23	−3.616 E−22	−4.500 E−08	−4.696 E−08	1.391 E−06
Stiffness Matrix					
		A (lb/in.)	B (lb)		
		B (lb)	D (lb-in.)		
6.897 E+05	2.299 E+05	0.000 E+00	2.255 E−11	7.806 E−12	8.132 E−20
2.299 E+05	6.897 E+05	0.000 E+00	7.806 E−12	2.082 E−11	−4.337 E−13
0.000 E+00	0.000 E+00	2.299 E+05	8.132 E−14	−4.337 E−13	7.156 E−12
2.255 E−11	7.806 E−12	8.132 E−20	2.764 E+03	8.377 E+02	1.177 E+02
7.806 E−12	2.082 E−11	−4.337 E−13	8.377 E+02	4.388 E+03	1.752 E+02
8.132 E−14	−4.337 E−13	7.156 E−12	1.177 E+02	1.752 E+02	8.378 E+02
Compliance Matrix					
		α (in./lb)	β (1/lb)		
		β^T (1/lb)	δ (1/lb-in.)		
1.631 E−06	−5.437 E−07	−2.871 E−38	−1.242 E−20	2.008 E−21	1.044 E−21
−5.437 E−07	1.631 E−06	−7.848 E−38	1.929 E−21	−7.223 E−21	2.084 E−21
−1.932 E−38	−8.083 E−38	4.350 E−06	9.437 E−22	1.753 E−21	−3.765 E−20
−1.242 E−20	2.013 E−21	8.838 E−22	3.852 E−04	−7.198 E−05	−3.906 E−05
1.927 E−21	−7.224 E−21	2.137 E−21	−7.198 E−05	2.433 E−04	−4.076 E−05
1.080 E−21	1.728 E−21	−3.766 E−20	−3.906 E−05	−4.076 E−05	1.208 E−03

Copyright ASME International (BPVC)

Table AD-507.2
Off-Axis Mechanical Strain

Ply No.	Lower Ply Surface			Upper Ply Surface		
	ε_1	ε_2	ε_6	ε_1	ε_2	ε_6
1	2.04 E−04	1.02 E−03	−0.19 E−09	2.04 E−04	1.02 E−03	−0.17 E−09
2	2.04 E−04	1.02 E−03	−0.17 E−09	2.04 E−04	1.02 E−03	−0.14 E−09
3	2.04 E−04	1.02 E−03	−0.14 E−09	2.04 E−04	1.02 E−03	−0.11 E−09
4	2.04 E−04	1.02 E−03	−0.11 E−09	2.04 E−04	1.02 E−03	−0.80 E−10
5	2.04 E−04	1.02 E−03	−0.80 E−10	2.04 E−04	1.02 E−03	−0.51 E−10
6	2.04 E−04	1.02 E−03	−0.51 E−10	2.04 E−04	1.02 E−03	−0.23 E−10
7	2.04 E−04	1.02 E−03	−0.23 E−10	2.04 E−04	1.02 E−03	5.88 E−12
8	2.04 E−04	1.02 E−03	5.88 E−12	2.04 E−04	1.02 E−03	3.44 E−11
9	2.04 E−04	1.02 E−03	3.44 E−11	2.04 E−04	1.02 E−03	6.29 E−11
10	2.04 E−04	1.02 E−03	6.26 E−11	2.04 E−04	1.02 E−03	9.14 E−11
11	2.04 E−04	1.02 E−03	9.14 E−11	2.04 E−04	1.02 E−03	1.20 E−10
12	2.04 E−04	1.02 E−03	1.20 E−10	2.04 E−04	1.02 E−03	1.48 E−10

$$k_2^* = {\beta_{21}^*}^T N_1^* + {\beta_{22}^*}^T N_2^* + {\beta_{26}^*}^T N_6^* + \delta_{21}^* M_1^* + \delta_{22}^* M_2^* + \delta_{26}^* M_6^* = 0.0 \quad (30)$$

$$k_6^* = {\beta_{61}^*}^T N_1^* + {\beta_{62}^*}^T N_2^* + {\beta_{66}^*}^T N_6^* + \delta_{61}^* M_1^* + \delta_{62}^* M_2^* + \delta_{66}^* M_6^* = 0.0 \quad (31)$$

AD-507.2 Off-Axis Mechanical Strains. For each ply, determine the longitudinal, transverse, and shear strains at both lower and upper surfaces of the ply in accordance with the general equation:

$$\epsilon_i = {\epsilon_i^0}* + Zk_i^*, \; i = 1, 2, 6 \quad (32)$$

where Z is the distance from the laminate midplane to the ply surface in question, divided by the midplane dimension.

For the lower surface of ply No. 1:

$$\epsilon_1 = {\epsilon_1^0}* + Zk_1^* = 0.000204 \quad (33)$$

$$\epsilon_2 = {\epsilon_2^0}* + Zk_2^* = 0.001019 \quad (34)$$

$$\epsilon_6 = {\epsilon_6^0}* + Zk_6^* = 0.0 \quad (35)$$

For all 12 plies, the off-axis mechanical strains are as shown in Table AD-507.2.

AD-507.3 On-Axis Mechanical Strains. From the off-axis strains and the transformation relationships, determine the longitudinal, transverse, and shear strains at both lower and upper surfaces in accordance with the general equations:

$$\epsilon_x = \frac{\epsilon_1 + \epsilon_2}{2} + \frac{\epsilon_1 - \epsilon_2}{2}(\cos 2\theta) + \frac{\epsilon_6}{2}(\sin 2\theta) \quad (36)$$

$$\epsilon_y = \frac{\epsilon_1 + \epsilon_2}{2} - \frac{\epsilon_1 - \epsilon_2}{2}(\cos 2\theta) + \frac{\epsilon_6}{2}(\sin 2\theta) \quad (37)$$

$$\epsilon_s = \frac{\epsilon_6}{2}(2\cos 2\theta) - \frac{\epsilon_1 - \epsilon_2}{2}(2\sin 2\theta) \quad (38)$$

For the lower surface of ply No. 1:

$$\epsilon_x = 0.000965$$

$$\epsilon_y = 0.000259$$

$$\epsilon_s = 0.000408$$

For all 12 plies, the on-axis mechanical strains are as shown in Table AD-507.3.

AD-508 STRENGTH ANALYSIS

The strength of the laminate will be examined in terms of the quadratic criterion in strain space. The laminate could also be examined in terms of the quadratic criterion in stress space, but that is not included in this example.

AD-508.1 Quadratic Criterion in Strain Space. The failure criterion in strain space is:

$$G_{ij}\epsilon_i\epsilon_j + G_i\epsilon_i - 1 = 0 \quad (39)$$

Expanding this for mechanical strain only yields:

$$G_{xx}\epsilon_x^2 + G_{xy}\epsilon_x\epsilon_y + G_{yx}\epsilon_x\epsilon_y + G_{yy}\epsilon_y^2 + G_{ss}\epsilon_s^2 + G_x\epsilon_x + G_y\epsilon_y - 1 = 0 \quad (40)$$

where

Copyright ASME International (BPVC)

Table AD-507.3
On-Axis Mechanical Strain

Ply No.	Lower Ply Surface			Upper Ply Surface		
	ε_x	ε_y	ε_s	ε_x	ε_y	ε_s
1	9.65 E−04	2.59 E−04	4.08 E−04	9.65 E−04	2.59 E−04	4.08 E−04
2	9.65 E−04	2.59 E−04	−0.41 E−03	9.65 E−04	2.59 E−04	−0.41 E−03
3	2.59 E−04	9.65 E−04	4.08 E−04	2.59 E−04	9.65 E−04	4.08 E−04
4	2.59 E−04	9.65 E−04	−0.41 E−03	2.59 E−04	9.65 E−04	−0.41 E−03
5	6.12 E−04	6.12 E−04	8.16 E−04	6.12 E−04	6.12 E−04	8.16 E−04
6	6.12 E−04	6.12 E−04	−0.82 E−03	6.12 E−04	6.12 E−04	−0.82 E−03
7	6.12 E−04	6.12 E−04	−0.82 E−03	6.12 E−04	6.12 E−04	−0.82 E−03
8	6.12 E−04	6.12 E−04	8.16 E−04	6.12 E−04	6.12 E−04	8.16 E−04
9	2.59 E−04	9.65 E−04	−0.41 E−03	2.59 E−04	9.65 E−04	−0.41 E−03
10	2.59 E−04	9.65 E−04	4.08 E−04	2.59 E−04	9.65 E−04	4.08 E−04
11	9.65 E−04	2.59 E−04	−0.41 E−03	9.65 E−04	2.59 E−04	−0.41 E−03
12	9.65 E−04	2.59 E−04	4.08 E−04	9.65 E−04	2.59 E−04	4.08 E−04

$$
\begin{aligned}
G_{ss} &= F_{ss}Q_{ss}^2 \\
G_x &= F_xQ_{xx} + F_yQ_{xy} \\
G_{xx} &= F_{xx}Q_{xx}^2 + F_{xy}Q_{xx}Q_{yx} + F_{yx}Q_{yx}Q_{xx} + F_{yy}Q_{yx}^2 \\
G_{xy} &= F_{xx}Q_{xx}Q_{xy} + F_{xy}Q_{xx}Q_{yy} + F_{xy}Q_{xy}Q_{yx} + F_{yy}Q_{xy}Q_{yy} \\
G_y &= F_xQ_{xy} + F_yQ_{yy} \\
G_{yx} &= G_{xy} \\
G_{yy} &= F_{xx}Q_{xy}^2 + F_{xy}Q_{xy}Q_{yy} + F_{yx}Q_{yx}Q_{yy} + F_{yy}Q_{yy}^2
\end{aligned}
$$

where the Qs are the on-axis modulus components of the lamina as determined in AD-501.1 and the F terms are from the tested strength constants of the lamina:

$$F_{xx} = 1 / XX_c$$

$$F_{yy} = 1 / YY_c$$

$$F_{xy} = F_{xy}^*\sqrt{F_{xx}F_{yy}}$$

where F_{xy}^* is taken to be −0.5;

$$
\begin{aligned}
F_{ss} &= 1/S^2 \\
F_{yx} &= F_{xy} \\
F_x &= \frac{1}{X} - \frac{1}{X_c} \\
F_y &= \frac{1}{Y} - \frac{1}{Y_c}
\end{aligned}
$$

and where ε_x, ε_y, and ε_s are the on-axis longitudinal, transverse, and shear strains at the lower and upper surfaces of each ply.

Equation (40) can be solved using the root of the quadratic equation

$$AR^2 + BR + C = 0$$

and

$$R = \frac{-B \pm \sqrt{B^2 - 4AC}}{2A}$$

where

$$
\begin{aligned}
A &= G_{xx}\epsilon_x^2 + G_{yx}\epsilon_x\epsilon_y + G_{yx}\epsilon_x\epsilon_y + G_{yy}\epsilon_y^2 + G_{ss}\epsilon_s^2 \\
B &= G_x\varepsilon_x + G_y\varepsilon_y \\
C &= -1
\end{aligned}
$$

Solve for the positive root only. For the illustrative example:

$$
\begin{aligned}
F_{ss} &= 0.3669 \times 10^{-7} \\
F_x &= 0 \\
F_{xx} &= 0.7062 \times 10^{-10} \\
F_{xy} &= -0.4202 \times 10^{-9} \\
F_{xy}^* &= -0.5 \\
F_y &= 0 \\
F_{yy} &= 0.1 \times 10^{-7} \\
G_{ss} &= 7{,}072.75 \\
G_x &= 0 \\
G_{xx} &= 1{,}926.43 \\
G_{xy} &= 3{,}508.02 \\
G_y &= 0 \\
G_{yx} &= 3{,}508.02 \\
G_{yy} &= 23{,}832.2
\end{aligned}
$$

For the lower surface of ply No. 1:

$$
\begin{aligned}
A &= G_{xx}\epsilon_x^2 + G_{xy}\epsilon_x\epsilon_y + G_{yx}\epsilon_x\epsilon_y + G_{yy}\epsilon_y^2 + G_{ss}\epsilon_s^2 \\
&= 1{,}926.43\left(9.65 \times 10^{-4}\right)^2 + 2(3{,}508.02)\left(9.65 \times 10^{-4}\right) \\
&\quad \times\left(2.59 \times 10^{-4}\right) + 23{,}832\left(2.59 \times 10^{-4}\right)^2 \\
&\quad + 7{,}072\left(4.08 \times 10^{-4}\right)^2 \\
&= 0.00632
\end{aligned}
$$

Copyright ASME International (BPVC)

$$B = G_x\epsilon_x + G_y\epsilon_y = 0$$

$$C = -1$$

$$R = \frac{-B \pm \sqrt{B^2 - 4AC}}{2A}$$

$$= \frac{0 \pm \sqrt{0 - 4(0.00632)(-1)}}{2(0.00632)} = 12.6$$

Failure occurs when $R = 1$. A strength ratio of 12.6 indicates a safety margin of 12.6 times.

Strength ratios R at the lower and upper surfaces of all 12 plies are listed below.

Ply No.	Lower	Upper
1	1.26 E+01	1.26 E+01
2	1.26 E+01	1.26 E+01
3	6.29 E+00	6.29 E+00
4	6.29 E+00	6.29 E+00
5	7.68 E+00	7.68 E+00
6	7.68 E+00	7.68 E+00
7	7.68 E+00	7.68 E+00
8	7.68 E+00	7.68 E+00
9	6.29 E+00	6.29 E+00
10	6.29 E+00	6.29 E+00
11	1.26 E+01	1.26 E+01
12	1.26 E+01	1.26 E+01

AD-509 EFFECTIVE ENGINEERING CONSTANTS

The effective engineering constants for laminate may be written in terms of the components of normalized compliance. Note that the stiffness properties of an asymmetric laminate may be difficult to determine experimentally, due to the bending–extensional coupling, and should not be improperly used. The equations below are for properties in the off-axis (1–2) reference coordinates. If effective elastic properties in other orientations are desired, the transformation relationship will have to be employed.

Effective longitudinal tensile modulus

$$E_1 = 1/\alpha_{11}^* = 2.554 \times 10^6 \text{ psi}$$

Effective transverse tensile modulus

$$E_2 = 1/\alpha_{22}^* = 2.554 \times 10^6 \text{ psi}$$

Effective shear modulus

$$E_6 = 1/\alpha_{66}^* = 0.957 \times 10^6 \text{ psi}$$

Longitudinal Poisson's ratio

$$\nu_{21} = \alpha_{12}^*/\alpha_{11}^* = 0.333$$

Transverse Poisson's ratio

$$\nu_{21} = \alpha_{12}^*/\alpha_{22}^* = 0.333$$

Longitudinal flexural modulus

$$Ef_1 = 1/\delta_{11}^* = 2.253 \times 10^6 \text{ psi}$$

Transverse flexural modulus

$$Ef_2 = 1/\delta_{22}^* = 3.568 \times 10^6 \text{ psi}$$

AD-510 STRAIN-SPACE FAILURE ENVELOPES

If desired, the laminate may be examined in terms of overlapping failure envelopes. To accomplish this, it is necessary to transform the quadratic strength parameter of AD-508 to the on-axis orientation of the plies to be examined. This transformation can be accomplished using a procedure similar to the transformation of modulus components.

Multiple angle functions in terms of the quadratic strength parameter are calculated:

$$U_{11} = \frac{1}{8}\left(3G_{xx} + 3G_{yy} + 2G_{xy} + 4G_{ss}\right) = 14{,}072.9$$

$$U_{22} = \frac{1}{2}\left(G_{xx} - G_{yy}\right) = -10{,}952.9$$

$$U_{33} = \frac{1}{8}\left(G_{xx} + G_{yy} - 2G_{xy} - 4G_{ss}\right) = -1{,}193.5$$

$$U_{44} = \frac{1}{8}\left(G_{xx} + G_{yy} + 6G_{xy} - 4G_{ss}\right) = 2{,}314.47$$

$$U_{55} = \frac{1}{8}\left(G_{xx} + G_{yy} - 2G_{xy} + 4G_{ss}\right) = 5{,}879.19$$

Transformation of the quadratic strength parameters in strain space in multiple angle functions is accomplished by:

$$G_{11} = U_{11} + U_{22}\cos 2\theta + U_{33}\cos 4\theta$$

$$G_{12} = U_{44} - U_{33}\cos 4\theta$$

$$G_{16} = \frac{1}{2}U_{22}\sin 2\theta + U_{33}\sin 4\theta$$

$$G_{21} = G_{12}$$

$$G_{22} = U_{11} - U_{22}\cos 2\theta + U_{33}\cos 4\theta$$

$$G_{26} = \frac{1}{2}U_{22}\sin 2\theta - U_{33}\sin 4\theta$$

$$G_{61} = G_{16}$$

Copyright ASME International (BPVC)

$$G_{62} = G_{26}$$

$$G_{66} = U_{55} - U_{33} \cos 4\theta$$

$$G_1 = \frac{1}{2}\left(G_x + G_y\right) + 1/2\left(G_x - G_y\right)\cos 2\theta$$

$$G_2 = \frac{1}{2}\left(G_x + G_y\right) - 1/2\left(G_x - G_y\right)\cos 2\theta$$

$$G_6 = \frac{1}{2}\left(G_x - G_y\right)\sin 2\theta$$

To determine the coordinates for the strain-space envelope for a particular ply orientation, assume values of either ϵ_1 or ϵ_2 and calculate the positive and negative values of the corresponding strain from the equation

$$G_{11}\epsilon_1^2 + 2G_{12}\epsilon_1\epsilon_2 + G_{22}\epsilon_2^2 + G_1\epsilon_1 + G_2\epsilon_2 - 1 = 0$$

using the quadratic equation as in AD-508.

For the illustrative example, strain-space envelopes are calculated for ply orientations of 75 deg, 15 deg, and 45 deg. Values of longitudinal strengths were assumed, and the positive and negative roots of the quadratic equation, $+\epsilon_2$ and $-\epsilon_2$, were calculated.

The coordinates for each orientation are shown in Table AD-510, and the failure envelope plots are shown in Figure AD-510.

Copyright ASME International (BPVC)

Table AD-510
Strain-Space Envelope Coordinates

Off-Axis Angle	STR*x*	STR1*y*	STR2*y*
75	0.001	0.149346 E−01	−0.163937 E−01
75	0.002	0.136969 E−01	−0.166149 E−01
75	0.003	0.01208	−0.164572 E−01
75	0.004	0.100063 E−01	−0.158425 E−01
75	0.005	0.730893 E−02	−0.146042 E−01
75	0.006	0.353535 E−02	−0.122896 E−01
75	0.0061	0.305251 E−02	−0.119527 E−01
75	0.0062	0.253858 E−02	−0.115847 E−01
75	0.0063	0.198726 E−02	−0.111793 E−01
75	0.0064	0.138975 E−02	−0.107277 E−01
75	0.0065	0.732755 E−03	−0.102166 E−01
75	0.0066	−0.533163 E−05	−0.962438 E−02
75	0.0067	−0.864546 E−03	−0.891106 E−02
75	0.0068	−0.193794 E−02	−0.798358 E−02
75	0.0069	−0.362526 E−02	−0.644216 E−02
75	−0.001	0.163937 E−01	−0.149346 E−01
75	−0.002	0.166149 E−01	−0.136969 E−01
75	−0.003	0.164572 E−01	−0.01208
75	−0.004	0.158425 E−01	−0.100063 E−01
75	−0.005	0.146042 E−01	−0.730893 E−02
75	−0.006	0.122896 E−01	−0.353534 E−02
15	0.001	0.646058 E−02	−0.671415 E−02
15	0.002	0.629778 E−02	−0.680493 E−02
15	0.003	0.611052 E−02	−0.687125 E−02
15	0.004	0.589812 E−02	−0.691243 E−02
15	0.005	0.565956 E−02	−0.692743 E−02
15	0.006	0.539339 E−02	−0.691484 E−02
15	0.007	0.050977 E−01	−0.687273 E−02
15	0.008	0.047699 E−01	−0.067985 E−01
15	0.009	0.044065 E−01	−0.668868 E−02
15	0.01	0.040027 E−01	−0.653846 E−02
15	0.011	0.355174 E−02	−0.634107 E−02
15	0.012	0.304356 E−02	−0.608647 E−02
15	0.013	0.246227 E−02	−0.575876 E−02
15	0.014	0.177994 E−02	−0.533001 E−02
15	0.015	0.937895 E−03	−0.474153 E−02
15	0.016	−0.246854 E−03	−0.381036 E−02
15	0.0161	−0.407783 E−03	−0.367479 E−02
15	0.0162	−0.584638 E−03	−0.352329 E−02
15	0.0163	−0.783557 E−03	−0.334973 E−02
15	0.0164	−0.101603 E−02	−0.314262 E−02

Copyright ASME International (BPVC)

Table AD-510
Strain-Space Envelope Coordinates (Cont'd)

Off-Axis Angle	STR*x*	STR1*y*	STR2*y*
15	0.0165	−0.130991 E−02	−0.287409 E−02
15	0.0166	−0.180535 E−02	−0.240401 E−02
15	−0.001	0.671415 E−02	−0.646058 E−02
15	−0.002	0.680493 E−02	−0.629778 E−02
15	−0.003	0.687125 E−02	−0.611052 E−02
15	−0.004	0.691243 E−02	−0.589812 E−02
15	−0.005	0.692743 E−02	−0.565956 E−02
15	−0.006	0.691484 E−02	−0.539339 E−02
15	−0.007	0.687273 E−02	−0.050977 E−01
15	−0.008	0.067985 E−01	−0.047699 E−01
15	−0.009	0.668868 E−02	−0.044065 E−01
15	−0.01	0.653846 E−02	−0.040027 E−01
15	−0.011	0.634107 E−02	−0.355174 E−02
15	−0.012	0.608647 E−02	−0.304356 E−02
15	−0.013	0.575876 E−02	−0.246227 E−02
15	−0.014	0.533001 E−02	−0.177995 E−02
15	−0.015	0.474153 E−02	−0.937894 E−03
15	−0.016	0.381035 E−02	0.246858 E−03
45	0.001	0.795831 E−02	−0.810515 E−02
45	0.002	0.769693 E−02	−0.799062 E−02
45	0.003	0.729982 E−02	−0.774036 E−02
45	0.004	0.674829 E−02	−0.733568 E−02
45	0.005	0.600768 E−02	−0.674192 E−02
45	0.006	0.500899 E−02	−0.589007 E−02
45	0.007	0.358084 E−02	−0.460877 E−02
45	0.008	0.077214 E−02	−0.194692 E−02
45	0.0081	−0.977554 E−04	−0.109171 E−02
45	−0.001	0.810515 E−02	−0.795831 E−02
45	−0.002	0.799062 E−02	−0.769693 E−02
45	−0.003	0.774036 E−02	−0.729982 E−02
45	−0.004	0.733568 E−02	−0.674829 E−02
45	−0.005	0.674192 E−02	−0.600768 E−02
45	−0.006	0.589007 E−02	−0.500899 E−02
45	−0.007	0.460877 E−02	−0.358084 E−02
45	−0.008	0.194691 E−02	−0.772134 E−03

Copyright ASME International (BPVC)

Figure AD-510
Failure Envelopes — Example Laminate in Strain Space

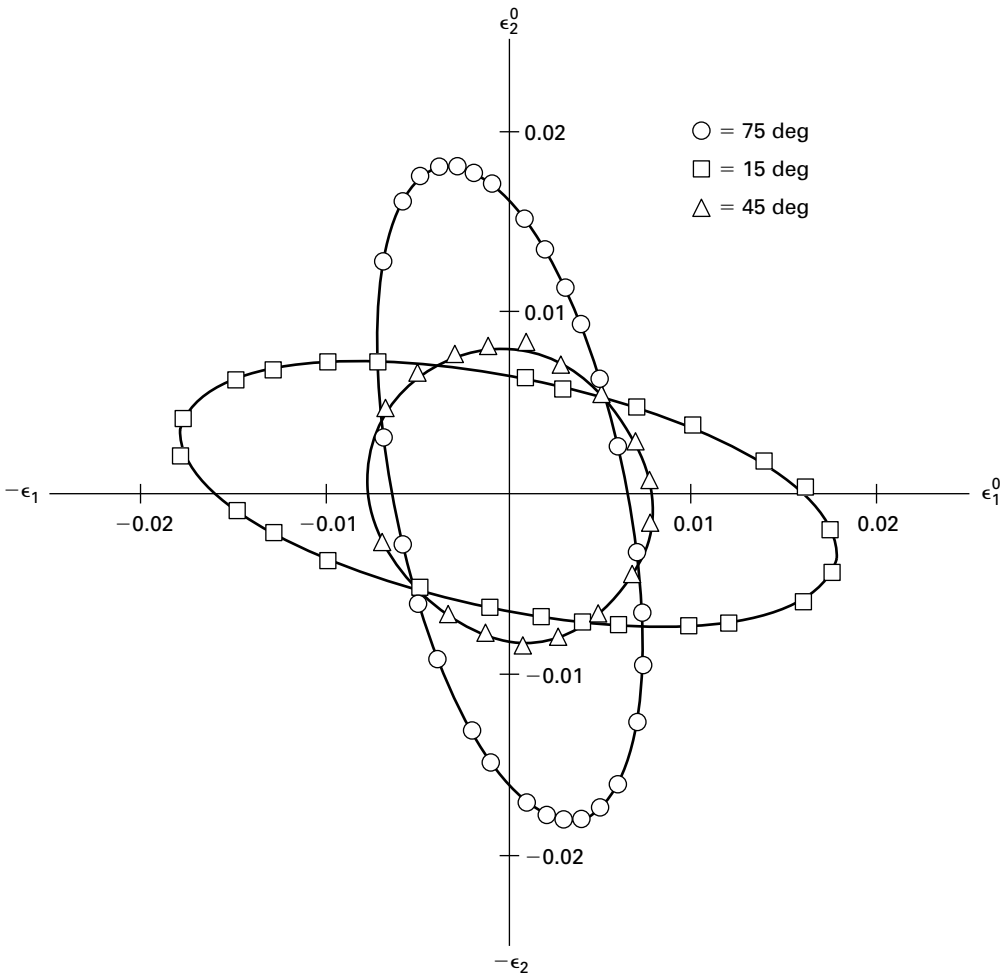

Copyright ASME International (BPVC)

NONMANDATORY APPENDIX AF
EXAMPLES FOR DESIGN RULES FOR CLASS II VESSELS

AF-100 GENERAL

Nonmandatory examples of calculations required under RD-1150, Vessel Parts Subject to Design Analysis. Symbols and values defined below are used in these examples.

D_o = outside diameter
E_1 = 1.35×10^6
= tensile modulus in the longitudinal (axial) direction, psi
E_2 = 3.15×10^6
= tensile modulus in the circumferential (hoop) direction, psi
F = design factor: 5 for all external pressure calculations and 10 for all internal pressure and reinforcement calculations
L = 60 in.
= length of cylinder
P = 50 psi
= internal pressure
P_A = allowable external pressure
R = 24 in.
= inside radius, shell or head
r = 4 in.
= inside radius, nozzle (in.)
S_s = 1,000 psi
= secondary bond shear strength
t = thickness, in.
ν_1 = 0.27
= Poisson's ratio, longitudinal (axial) direction
ν_2 = 0.23
= Poisson's ratio, circumferential (hoop) direction

AF-200 CYLINDRICAL SHELLS UNDER UNIFORM INTERNAL PRESSURE (SEE RD-1171.1)

Select the greater of (a) or (b) below:

(a) Longitudinal Stress

$$t_1 = \frac{PR}{2(0.001E_1)}$$

$$= \frac{50 \times 24}{2\left(0.001 \times 1.35 \times 10^6\right)}$$

$$t_1 = 0.44 \text{ in.}$$

(b) Circumferential Stress

$$t_2 = \frac{PR}{0.001E_2}$$

$$= \frac{50 \times 24}{0.001 \times 3.15 \times 10^6}$$

$$t_2 = 0.38 \text{ in.} < 0.45$$

Therefore let $t = t_1 = 0.45$ in.

NOTE: Both t_1 and t_2 are greater than 0.25 in., the minimum laminate thickness allowed.

AF-210 SPHERICAL SHELLS UNDER INTERNAL PRESSURE (SEE RD-1171.2)

Assume hand lay-up sphere with $E_1 = E_2 = 2.2 \times 10^6$ psi:

$$t = \frac{PR}{2(0.001\,\text{E})}$$

$$= \frac{50 \times 24}{2\left(0.001 \times 2.2 \times 10^6\right)}$$

$$t = 0.27 \text{ in.}$$

AF-300 CYLINDRICAL SHELLS UNDER EXTERNAL PRESSURE (SEE RD-1172.1)

Assume: $E_{at} = 1.35 \times 10^6$, $E_{af} = 1.39 \times 10^6$, $t = 0.275$, $V_x = 0.18$, $V_y = 0.32$, $D_o = 48.55$, $L = 60$, $F = 5$

Calculate γ

$$Z_p = \frac{(2.46 \times 10^6)^{3/2}(1.35 \times 10^6)^{1/2}}{(1.39 \times 10^6)^2}[(1 - 0.18) \times 0.32]^{1/2} \times \frac{60^2}{\left(\frac{48.55}{2} \times t\right)}$$

$$= 1214$$

$\gamma = 0.9$

Copyright ASME International (BPVC)

$$P_a = \frac{0.84 \times 0.8531 \times 0.9 \times (2.46 \times 10^6)^{3/4} (1.35 \times 10^6)^{1/4} (0.275)^{5/2}}{[(1 - 0.18) \times 0.32]^{3/4} \times 60 \times \left(\frac{48.55}{2}\right)^{3/2} \times 5}$$

$$= 1.58 \text{ psi}$$

AF-310 SPHERICAL SHELLS UNDER UNIFORM EXTERNAL PRESSURE (SEE RD-1172.2)

Assume hand lay-up sphere with $E_1 = E_2 = 2.2 \times 10^6$ psi. Therefore, let $E = 2.2 \times 10^6$ psi and $F = 10$. Also, assume: $t = 0.25$ in. Therefore, $R_o = R + t = 24.25$ in.

Allowable pressure:

$$P_A = \frac{0.41 \frac{E}{F} \times t^2}{\sqrt{3(1 - \nu_1\nu_2)}\, R_o^2}$$

$$= \frac{0.41 \frac{2.2 \times 10^6}{10} 0.25^2}{\sqrt{3(1 - 0.27 \times 0.23)}\, 24.25^2}$$

$$P_A = 5.72 \text{ psi}$$

AF-400 THICKNESS OF HEADS UNDER INTERNAL PRESSURE (SEE RD-1173.1)

Assume hand lay-up head with $E_1 = E_2 = 2.2 \times 10^6$ psi. Therefore, let $E = 2.2 \times 10^6$ and let $D = 2R$ = inside diameter = 48 in.

(a) Ellipsoidal Head

$$t = \frac{PD}{2(0.001E)}$$

$$= \frac{50 \times 48}{2\left(0.001 \times 2.2 \times 10^6\right)}$$

$$t = 0.55 \text{ in.}$$

(b) Hemispherical Head

$$t = \frac{PR}{2(0.001E)}$$

$$= \frac{50 \times 24}{2\left(0.001 \times 2.2 \times 10^6\right)}$$

$$t = 0.27 \text{ in.}$$

AF-410 THICKNESS OF HEADS UNDER EXTERNAL PRESSURE (SEE RD-1173.2)

Assume hand lay-up head with $E_1 = E_2 = 2.2 \times 10^6$ psi. Therefore, let $E = 2.2 \times 10^6$ psi, and $F = 10$. Also, assume: $t = 0.25$ in. so: $D_o = 2R + t = 48.25$ in. and $K_o = 0.9$ for 2:1 ellipsoidal heads, per Table RD-1173.2.

$$P_A = \frac{0.41 \frac{E}{F} t^2}{\sqrt{3(1 - \nu_1\nu_2)}\, (K_o D_o)^2}$$

$$= \frac{0.41 \left(\frac{2.2 \times 10^6}{10}\right) 0.25^2}{\sqrt{3(1 - 0.27 \times 0.23)}\, (0.9 \times 48.25)^2}$$

$$P_A = 1.78 \text{ psi}$$

AF-420 REINFORCEMENT OF OPENINGS AND NOZZLE ATTACHMENTS (SEE RD-1174.2)

(a) Length of Secondary Overlay on Nozzle. For internal pressure, let $F = 10$; also, let $r = 4$ in. = inside radius of nozzle.

$$L_b = \frac{Pr}{2\frac{S_s}{F}}$$

$$= \frac{50 \times 4}{2\frac{1000}{10}}$$

$$L_b = 1 \text{ in.} < 3 \text{ in.}$$

Therefore, let $L_b = 3$ in.

(b) Thickness of Secondary Overlay on Nozzle. Assume secondary laminate modulus $E = E_1 = E_2 = 2.2 \times 10^6$ psi. Therefore, let $E = 2.2 \times 10^6$ psi and $S_a = 0.001E = 2.2 \times 10^3$ psi = allowable stress of secondary overlay.

$$t_b = \frac{Pr}{S_a}$$

$$= \frac{50 \times 4}{2.2 \times 10^3}$$

$$t_b = 0.09 \text{ in.} < 0.25 \text{ in.}$$

Therefore, let $t_b = 0.25$ in.

NOTE: In both (a) and (b) above, the minimum allowable dimension governs.

Copyright ASME International (BPVC)

(c) Thickness of Reinforcement Pad on Shell or Head. Assume secondary laminate modulus $E = E_1 = E_2 = 2.2 \times 10^6$ psi. Therefore, let $E_2 = 2.2 \times 10^6$ and $t = 0.25$ in. = shell thickness. Select the greater of (1) and (2) below:

(1) Compute

$$t_{p1} = \frac{PR}{0.001E_2} = \frac{50 \times 24}{2.2 \times 10^3}$$

$$t_{p1} = 0.55 \text{ in.}$$

(2) Compute as follows.

Step 1. Compute Beta factor

$$\beta = \frac{\sqrt[4]{3(1 - \nu_1\nu_2)}}{2}\frac{r}{\sqrt{Rt}} = \frac{\sqrt[4]{3(1 - 0.27 \times 0.23)}}{2}\frac{4}{\sqrt{24 \times 0.25}}$$

$$\beta = 1.06$$

Step 2. Determine K_t from Figure RD-1174.3 for $\beta = 1.06$. $K_t = 8.8$.

Step 3. Compute maximum stress at opening. Let $S_2 = 0.001E_2 = 2.2 \times 10^3$ psi = allowable stress for the laminate in the circumferential direction. $S_{\max} = S_2K_t = 1.94 \times 10^4$ psi.

Step 4. Determine the moment M associated with $S_{\max}$:

$$M = \frac{S_{\max}t^2}{6} = \frac{1.94 \times 10^4 \times 0.25^2}{6}$$

$$M = 201.7 \text{ in.} - \text{lb}$$

Step 5. Determine reinforcement pad thickness. Let $E_f = 2.25 \times 10^6$ psi = flexural modulus of reinforcing laminate in the circumferential direction. $S_f = 0.001E_f = 2.25 \times 10^3$ psi = allowable stress.

$$t_{p2} = \sqrt{\frac{6\frac{M}{2}}{S_f}} - t = \sqrt{\frac{6\frac{201.7}{2}}{2.25 \times 10^3}} - 0.25$$

$$t_{p2} = 0.27 \text{ in.} < 0.55.$$

Therefore let $t_p = t_{p1} = 0.55$ in.

(d) Length of Reinforcing Pad. Assume $L_c = 2r = 8$ in. = longest chord length of opening.

$$L_p = \frac{\pi L_c P}{\frac{4S_s}{F}} = \frac{\pi 8 \times 50}{\frac{4 \times 1000}{10}}$$

$$L_p = 3.14 \text{ in.} < 6 \text{ in.}$$

according to the requirements of RD-1174.2(f)(2)(-b), therefore, let $L_p = 6$ in.

AF-500 HEAD-TO-SHELL JOINT OVERLAY SUBJECT TO INTERNAL PRESSURE (SEE RD-1175.2)

(a) Thickness of Overlay

$$t_o = \frac{P(R + t)}{0.001E_2} = \frac{50(24 + 0.25)}{0.001 \times 2.2 \times 10^6}$$

$$t_o = 0.55 \text{ in.}$$

(b) Length of Overlay

$$L_o = \frac{PR}{\left(\frac{2S_s}{F}\right)} = \frac{50 \times 24}{\left(\frac{2 \times 1000}{10}\right)}$$

$$L_o = 6 \text{ in.}$$

Copyright ASME International (BPVC)

NONMANDATORY APPENDIX AG
GUIDE TO INFORMATION APPEARING ON CERTIFICATE OF AUTHORIZATION (SEE FIGURE AG-1)

Table AG-1
Guide to Information Appearing on Certificate of Authorization (See Figure AG-1)

Item	Description
(1)	Certification Mark granted by the Society, with RP Designator.
(2)	– The name of the Manufacturer; this description could include "doing business as" (DBA) or an abbreviation of the name. – The full street address or physical location, city, state or province, country, and zip code.
(3)	This entry describes the scope and limitations, if any, on use of the Certification Mark and Designator, as illustrated below. **RP Designator** – Manufacture of Class I reinforced plastic pressure vessels at the above location only. – Manufacture of Class II reinforced plastic pressure vessels at the above location only. – Manufacture of Class I and Class II reinforced plastic pressure vessels at the above location only. – Manufacture of Class II reinforced plastic pressure vessels at field sites controlled by the above location. – Manufacture of Class I and Class II reinforced plastic pressure vessels at the above location and Class II reinforced plastic pressure vessels only at field sites controlled by that location. – Manufacture of Class II reinforced plastic pressure vessels at the above location only and at field sites controlled by that location. – Manufacture of Class III reinforced plastic pressure vessels at the above location only. – Manufacture of Class I and Class III reinforced plastic pressure vessels at the above location only. – Manufacture of Class I, Class II, and Class III reinforced plastic pressure vessels at the above location only. – Manufacture of Class I and Class III reinforced plastic pressure vessels at the above location only and Class II reinforced plastic pressure vessels at the above location only and at field sites controlled by that location.
(4)	The date authorization was granted by the Society to use the Certification Mark stamp indicated.
(5)	The date authorization to use the Certification Mark stamp will expire.
(6)	A unique Certificate number assigned by the Society.
(7),(8)	The signatures of the current chair and managing director.

Copyright ASME International (BPVC)

Figure AG-1
Sample Certificate of Authorization

CERTIFICATION MARK ①

CERTIFICATE OF AUTHORIZATION

The named company is authorized by The American Society of Mechanical Engineers (ASME) for the scope of activity shown below in accordance with the applicable rules of the ASME Boiler and Pressure Vessel Code. The use of the Certification Mark and the authority granted by this Certificate of Authorization are subject to the provisions of the agreement set forth in the application. Any construction stamped with this Certification Mark shall have been built strictly in accordance with the provisions of the ASME Boiler and Pressure Vessel Code.

COMPANY: ②

SCOPE: ③

AUTHORIZED: ④

EXPIRES: ⑤

CERTIFICATE NUMBER: ⑥

⑦

CHAIR, BOARD ON CONFORMITY ASSESSMENT

⑧

MANAGING DIRECTOR, CONFORMITY ASSESSMENT

The American Society of Mechanical Engineers

SAMPLE

Copyright ASME International (BPVC)

NONMANDATORY APPENDIX AH
GUIDANCE FOR THE USE OF U.S. CUSTOMARY AND SI UNITS IN THE ASME BOILER AND PRESSURE VESSEL CODE

(19) AH-100 USE OF UNITS IN EQUATIONS

The equations in this Section are suitable for use with either the U.S. Customary or the SI units provided in Mandatory Appendix 7, or with the units provided in the nomenclatures associated with the equations. It is the responsibility of the individual and organization performing the calculations to ensure that appropriate units are used. Either U.S. Customary or SI units may be used as a consistent set. When necessary to convert from one system of units to another, the units shall be converted to at least three significant figures for use in calculations and other aspects of construction.

AH-200 GUIDELINES USED TO DEVELOP SI EQUIVALENTS

The following guidelines were used to develop SI equivalents:

(a) SI units are placed in parentheses after the U.S. Customary units in the text.

(b) In general, separate SI tables are provided if interpolation is expected. The table designation (e.g., table number) is the same for both the U.S. Customary and SI tables, with the addition of suffix "M" to the designator for the SI table, if a separate table is provided. In the text, references to a table use only the primary table number (i.e., without the "M"). For some small tables, where interpolation is not required, SI units are placed in parentheses after the U.S. Customary unit.

(c) Separate SI versions of graphical information (charts) are provided, except that if both axes are dimensionless, a single figure (chart) is used.

(d) In most cases, conversions of units in the text were done using hard SI conversion practices, with some soft conversions on a case-by-case basis, as appropriate. This was implemented by rounding the SI values to the number of significant figures of implied precision in the existing U.S. Customary units. For example, 3,000 psi has an implied precision of one significant figure. Therefore, the conversion to SI units would typically be to 20 000 kPa. This is a difference of about 3% from the "exact" or soft conversion of 20 684.27 kPa. However, the precision of the conversion was determined by the Committee on a case-by-case basis. More significant digits were included in the SI equivalent if there was any question. The values of allowable stress in Section II, Part D generally include three significant figures.

(e) Minimum thickness and radius values that are expressed in fractions of an inch were generally converted according to the following table:

Fraction, in.	Proposed SI Conversion, mm	Difference, %
1/32	0.8	−0.8
3/64	1.2	−0.8
1/16	1.5	5.5
3/32	2.5	−5.0
1/8	3	5.5
5/32	4	−0.8
3/16	5	−5.0
7/32	5.5	1.0
1/4	6	5.5
5/16	8	−0.8
3/8	10	−5.0
7/16	11	1.0
1/2	13	−2.4
9/16	14	2.0
5/8	16	−0.8
11/16	17	2.6
3/4	19	0.3
7/8	22	1.0
1	25	1.6

(f) For nominal sizes that are in even increments of inches, even multiples of 25 mm were generally used. Intermediate values were interpolated rather than converting and rounding to the nearest mm. See examples in the following table. [Note that this table does not apply to nominal pipe sizes (NPS), which are covered below.]

Size, in.	Size, mm
1	25
1 1/8	29
1 1/4	32
1 1/2	38
2	50
2 1/4	57
2 1/2	64

Copyright ASME International (BPVC)

Table continued

Size, in.	Size, mm
3	75
3½	89
4	100
4½	114
5	125
6	150
8	200
12	300
18	450
20	500
24	600
36	900
40	1 000
54	1 350
60	1 500
72	1 800

Size or Length, ft	Size or Length, m
3	1
5	1.5
200	60

(g) For nominal pipe sizes, the following relationships were used:

U.S. Customary Practice	SI Practice	U.S. Customary Practice	SI Practice
NPS ⅛	DN 6	NPS 20	DN 500
NPS ¼	DN 8	NPS 22	DN 550
NPS ⅜	DN 10	NPS 24	DN 600
NPS ½	DN 15	NPS 26	DN 650
NPS ¾	DN 20	NPS 28	DN 700
NPS 1	DN 25	NPS 30	DN 750
NPS 1¼	DN 32	NPS 32	DN 800
NPS 1½	DN 40	NPS 34	DN 850
NPS 2	DN 50	NPS 36	DN 900
NPS 2½	DN 65	NPS 38	DN 950
NPS 3	DN 80	NPS 40	DN 1 000
NPS 3½	DN 90	NPS 42	DN 1 050
NPS 4	DN 100	NPS 44	DN 1 100
NPS 5	DN 125	NPS 46	DN 1 150
NPS 6	DN 150	NPS 48	DN 1 200
NPS 8	DN 200	NPS 50	DN 1 250
NPS 10	DN 250	NPS 52	DN 1 300
NPS 12	DN 300	NPS 54	DN 1 350
NPS 14	DN 350	NPS 56	DN 1 400
NPS 16	DN 400	NPS 58	DN 1 450
NPS 18	DN 450	NPS 60	DN 1 500

(h) Areas in square inches ($in.^2$) were converted to square millimeters (mm^2), and areas in square feet (ft^2) were converted to square meters (m^2). See examples in the following table:

Area (U.S. Customary)	Area (SI)
1 $in.^2$	650 mm^2
6 $in.^2$	4 000 mm^2
10 $in.^2$	6 500 mm^2
5 ft^2	0.5 m^2

(i) Volumes in cubic inches ($in.^3$) were converted to cubic millimeters (mm^3) and volumes in cubic feet (ft^3) were converted to cubic meters (m^3). See examples in the following table:

Volume (U.S. Customary)	Volume (SI)
1 $in.^3$	16 000 mm^3
6 $in.^3$	100 000 mm^3
10 $in.^3$	160 000 mm^3
5 ft^3	0.14 m^3

(j) Although the pressure should always be in MPa for calculations, there are cases where other units are used in the text. For example, kPa is used for small pressures. Also, rounding was to one significant figure (two at the most) in most cases. See examples in the following table. (Note that 14.7 psi converts to 101 kPa, while 15 psi converts to 100 kPa. While this may seem at first glance to be an anomaly, it is consistent with the rounding philosophy.)

Pressure (U.S. Customary)	Pressure (SI)
0.5 psi	3 kPa
2 psi	15 kPa
3 psi	20 kPa
10 psi	70 kPa
14.7 psi	101 kPa
15 psi	100 kPa
30 psi	200 kPa
50 psi	350 kPa
100 psi	700 kPa
150 psi	1 MPa
200 psi	1.5 MPa
250 psi	1.7 MPa
300 psi	2 MPa
350 psi	2.5 MPa
400 psi	3 MPa
500 psi	3.5 MPa
600 psi	4 MPa
1,200 psi	8 MPa
1,500 psi	10 MPa

(k) Material properties that are expressed in psi or ksi (e.g., allowable stress, yield and tensile strength, elastic modulus) were generally converted to MPa to three significant figures. See example in the following table:

--`,,```,,,,````-`-`,,`,,`,`,,`---

Copyright ASME International (BPVC)

Strength (U.S. Customary)	Strength (SI)
95,000 psi	655 MPa

(l) In most cases, temperatures (e.g., for PWHT) were rounded to the nearest 5°C. Depending on the implied precision of the temperature, some were rounded to the nearest 1°C or 10°C or even 25°C. Temperatures colder than 0°F (negative values) were generally rounded to the nearest 1°C. The examples in the table below were created by rounding to the nearest 5°C, with one exception:

Temperature, °F	Temperature, °C
70	20
100	38
120	50
150	65
200	95
250	120
300	150
350	175
400	205
450	230
500	260
550	290
600	315
650	345
700	370
750	400
800	425
850	455
900	480
925	495
950	510
1,000	540
1,050	565
1,100	595
1,150	620
1,200	650
1,250	675
1,800	980
1,900	1 040
2,000	1 095
2,050	1 120

AH-300 SOFT CONVERSION FACTORS

The following table of "soft" conversion factors is provided for convenience. Multiply the U.S. Customary value by the factor given to obtain the SI value. Similarly, divide the SI value by the factor given to obtain the U.S. Customary value. In most cases it is appropriate to round the answer to three significant figures.

U.S. Customary	SI	Factor	Notes
in.	mm	25.4	...
ft	m	0.3048	...
$in.^2$	mm^2	645.16	...
ft^2	m^2	0.09290304	...
$in.^3$	mm^3	16,387.064	...
ft^3	m^3	0.02831685	...
U.S. gal.	m^3	0.003785412	...
U.S. gal.	liters	3.785412	...
psi	MPa (N/mm^2)	0.0068948	Used exclusively in equations
psi	kPa	6.894757	Used only in text and for nameplate
psi	bar	0.06894757	...
ft-lb	J	1.355818	...
°F	°C	$^5/_9$ × (°F −32)	Not for temperature difference
°F	°C	$^5/_9$	For temperature differences only
R	K	$^5/_9$	Absolute temperature
lbm	kg	0.4535924	...
lbf	N	4.448222	...
in.-lb	N·mm	112.98484	Use exclusively in equations
ft-lb	N·m	1.3558181	Use only in text
$ksi\sqrt{in.}$	$MPa\sqrt{m}$	1.0988434	...
Btu/hr	W	0.2930711	Use for boiler rating and heat transfer
lb/ft^3	kg/m^3	16.018463	...

Copyright ASME International (BPVC)

NONMANDATORY APPENDIX AI
RIGOROUS NASA SP-8007 SOLUTION FOR LATERAL AND LONGITUDINAL PRESSURE

AI-100

$$P_a = \frac{R}{FS\left[n^2 + \frac{1}{2}\left(\frac{m\pi R}{L}\right)^2\right]} \frac{\det\begin{bmatrix} C_{11} & C_{12} & C_{13} \\ C_{21} & C_{22} & C_{23} \\ C_{31} & C_{32} & C_{33} \end{bmatrix}}{\det\begin{bmatrix} C_{11} & C_{12} \\ C_{21} & C_{22} \end{bmatrix}}$$

$$C_{11} = A_{11}\left(\frac{m\pi}{L}\right)^2 + A_{66}\left(\frac{n}{R}\right)^2$$

$$C_{22} = A_{22}\left(\frac{n}{R}\right)^2 + A_{66}\left(\frac{m\pi}{L}\right)^2$$

$$C_{33} = D_{11}\left(\frac{m\pi}{L}\right)^4 + 2(D_{12} + 2D_{66})\left(\frac{m\pi}{L}\right)^2\left(\frac{n}{R}\right)^2 + D_{22}\left(\frac{n}{R}\right)^4 + \frac{A_{22}}{R^2} + \frac{2B_{22}}{R}\left(\frac{n}{R}\right)^2 + \frac{2B_{12}}{R}\left(\frac{m\pi}{L}\right)^2$$

$$C_{13} = \frac{A_{12}}{R}\left(\frac{m\pi}{L}\right) + B_{11}\left(\frac{m\pi}{L}\right)^3 + (B_{12} + 2B_{66})\left(\frac{m\pi}{L}\right)\left(\frac{n}{R}\right)^2$$

$$C_{31} = C_{13}$$

$$C_{12} = (A_{12} + A_{66})\left(\frac{m\pi}{L}\right)\left(\frac{n}{R}\right)$$

$$C_{21} = C_{12}$$

$$C_{23} = (B_{12} + 2B_{66})\left(\frac{m\pi}{L}\right)^2\left(\frac{n}{R}\right) + \frac{A_{22}}{R}\left(\frac{n}{R}\right) + B_{22}\left(\frac{n}{R}\right)^3$$

$$C_{32} = C_{23}$$

where

A, B, D = values from the classical ABD matrix
n, m = integers varied to obtain the combination that gives the lowest buckling pressure
$R = D_o/2$

For axial loading only (lb/in.),

Copyright ASME International (BPVC)

$$N_{xa} = \frac{\left(\frac{L}{m\pi}\right)^2}{FS} \frac{\det\begin{bmatrix} C_{11} & C_{12} & C_{13} \\ C_{21} & C_{22} & C_{23} \\ C_{31} & C_{32} & C_{33} \end{bmatrix}}{\det\begin{bmatrix} C_{11} & C_{12} \\ C_{21} & C_{22} \end{bmatrix}}$$

For cylindrical bending loads, the maximum line load (lb/in.) from the bending moment, M (in.-lb), line load is calculated from $M/\pi R^2$. It is recommended that it not exceed 75% of the critical axial line load, N_{xa}, as calculated above per NASA SP-8007.

AI-200 BUCKLING EXAMPLE

(a) Introduction. This demonstrates the use of the rigorous NASA SP-8007 solution and the simplified equation for cylinder buckling due to external pressure in RD-1172. The following laminate is used for evaluation purposes:

Material (Top to Bottom)	E_1, psi	E_2, psi	ν_{12}	G_{12}, psi	t, in.
Veil	550,000	550,000	0.34	200,000	0.013
Two mats	1,030,000	1,030,000	0.34	390,000	0.086
$(\pm 54)_3$	1,140,000	1,600,000	0.45	1,000,000	0.127
Mat	1,030,000	1,030,000	0.34	390,000	0.043
Woven roving	2,296,640	1,957,986	0.124	270,000	0.039
Mat	1,030,000	1,030,000	0.34	390,000	0.043

From this, the classical laminate theory *ABD* matrix is calculated as follows:

$$ABD = \begin{bmatrix} 501{,}426.04 & 208{,}198.05 & 0.00 & -5{,}608.95 & 1{,}262.41 & 0.00 \\ 208{,}198.05 & 569{,}659.28 & 0.00 & 1{,}262.41 & -3{,}035.67 & 0.00 \\ 0.00 & 0.00 & 207{,}210.00 & 0.00 & 0.00 & 1{,}118.52 \\ -5{,}608.95 & 1{,}262.41 & 0.00 & 4{,}662.20 & 1{,}400.18 & 0.00 \\ 1{,}262.41 & -3{,}035.67 & 0.00 & 1{,}400.18 & 4{,}613.11 & 0.00 \\ 0.00 & 0.00 & 1{,}118.52 & 0.00 & 0.00 & 1{,}391.70 \end{bmatrix}$$

The *ABD* inverse matrix (required for the simplified equation) is then

$$ABD^{-1} = \begin{bmatrix} 2.42021 \times 10^{-6} & 9.06151 \times 10^{-7} & 0 & 3.88959 \times 10^{-6} & -2.43918 \times 10^{-6} & 0 \\ -9.06151 \times 10^{-7} & 2.10438 \times 10^{-6} & 0 & -2.36602 \times 10^{-6} & 2.35091 \times 10^{-6} & 0 \\ 0 & 0 & 4.84705 \times 10^{-6} & 0 & 0 & -3.89561 \times 10^{-6} \\ 3.88959 \times 10^{-6} & -2.36602 \times 10^{-6} & 0 & 2.42724 \times 10^{-4} & -7.62934 \times 10^{-5} & 0 \\ -2.43918 \times 10^{-6} & 2.35091 \times 10^{-6} & 0 & -7.62934 \times 10^{-5} & 2.42145 \times 10^{-4} & 0 \\ 0 & 0 & -3.89561 \times 10^{-6} & 0 & 0 & 7.21677 \times 10^{-4} \end{bmatrix}$$

(b) Solution. The rigorous NASA SP-8007 solution is calculated as follows: The constants used in the NASA SP-8007 solution are defined as

$$A_{11} = ABD_{1,1} \quad A_{12} = ABD_{1,2} \quad A_{16} = ABD_{1,3} \quad A_{26} = ABD_{2,3} \quad A_{22} = ABD_{2,2} \quad A_{66} = ABD_{3,3}$$

$$B_{11} = ABD_{4,1} \quad B_{12} = ABD_{5,1} \quad B_{16} = ABD_{6,1} \quad A_{26} = ABD_{5,3} \quad B_{22} = ABD_{5,2} \quad B_{66} = ABD_{6,3}$$

$$D_{11} = ABD_{4,4} \quad D_{12} = ABD_{5,4} \quad D_{16} = ABD_{6,4} \quad D_{26} = ABD_{6,5} \quad D_{22} = ABD_{5,5} \quad D_{66} = ABD_{6,6}$$

Copyright ASME International (BPVC)

The A_{11} term is the 1,1 term and the D_{11} term is the 4,4 term from the *ABD* matrix given above. Some values of the constants, given here to clarify the procedure, are

$$A_{11} = 501{,}426.04 \qquad A_{12} = 208{,}198.05 \qquad D_{11} = 4{,}662.20 \qquad D_{66} = 1{,}391.70 \qquad A_{66} = 207{,}210.00$$

$$B_{12} = 1{,}262.41 \qquad B_{26} = 0$$

The cylinder dimensions and the buckling modes being evaluated are

$$R = 36.351 \text{ (outside radius, in.)} \qquad L = 72 \text{ (design length between stiffeners, in.)} \qquad F = 5 \text{ (design factor)}$$

m = 1, 2..., 30 and n = 1, 2..., 30 (modes in the hoop and axial directions, taking on integer values between 1 and 30)

t = 0.351 (total thickness of laminate; this is required input for calculating effective mechanical properties for the simplified equation, in.)

The preliminary calculations for the NASA SP-8007 equations for the first 30 × 30 modes are

$$C_{11}\,m, n = A_{11}\left(\frac{m\pi}{L}\right)^2 + A_{66}\left(\frac{n}{R}\right)^2$$

$$C_{22}\,m, n = A_{22}\left(\frac{n}{R}\right)^2 + A_{66}\left(\frac{m\pi}{L}\right)^2$$

$$C_{33}\,m, n = D_{11}\left(\frac{m\pi}{L}\right)^4 + 2(D_{12} + 2D_{66})\left(\frac{m\pi}{L}\right)^2\left(\frac{n}{R}\right)^2 + D_{22}\left(\frac{n}{R}\right)^4 + \frac{A_{22}}{R^2} + \frac{2B_{22}}{R}\left(\frac{n}{R}\right)^2 + \frac{2B_{12}}{R}\left(\frac{m\pi}{L}\right)^2$$

$$C_{12}\,m, n = (A_{12} + A_{66})\left(\frac{m\pi}{L}\right)\left(\frac{n}{R}\right)$$

$$C_{21}\,m, n = C_{12}\,m, n$$

$$C_{23}\,m, n = (B_{12} + 2B_{66})\left(\frac{m\pi}{L}\right)^2\left(\frac{n}{R}\right) + \frac{A_{22}}{R}\left(\frac{n}{R}\right) + B_{22}\left(\frac{n}{R}\right)^3$$

$$C_{32}\,m, n = C_{23}\,m, n$$

$$C_{13}\,m, n = \frac{A_{12}}{R}\left(\frac{m\pi}{L}\right) + B_{11}\left(\frac{m\pi}{L}\right)^3 + (B_{12} + 2B_{66})\left(\frac{m\pi}{L}\right)\left(\frac{n}{R}\right)^2$$

$$C_{31}\,m, n = C_{13}\,m, n$$

The determinant of the matrix $\begin{bmatrix} C_{11} & C_{12} & C_{13} \\ C_{21} & C_{22} & C_{23} \\ C_{31} & C_{32} & C_{33} \end{bmatrix}$ can be calculated from

$$\begin{aligned} \det N_{m,n} &= C_{11\,m,n}\,(C_{22\,m,n}\,C_{33\,m,n} - C_{32\,m,n}\,C_{23\,m,n}) - C_{21\,m,n}\,(C_{12\,m,n}\,C_{33\,m,n} - C_{32\,m,n}\,C_{13\,m,n}) \\ &\quad + C_{31\,m,n}\,(C_{12\,m,n}\,C_{23\,m,n} - C_{22\,m,n}\,C_{13\,m,n}) \end{aligned}$$

The determinant of the matrix $\begin{bmatrix} C_{11} & C_{12} \\ C_{21} & C_{22} \end{bmatrix}$ can be calculated from

$$\det D_{m,n} = C_{11\,m,n}\,C_{22\,m,n} - C_{21\,m,n}\,C_{12\,m,n}$$

The critical pressure for lateral and longitudinal pressure is then calculated by varying the m and n integers to obtain the smallest value of P_a (allowable design lateral and longitudinal pressure) for the first 30 × 30 modes

Copyright ASME International (BPVC)

$$P_{a\ m,n} = \frac{R}{F\left[n^2 + \frac{1}{2}\left(\frac{m\pi R}{L}\right)^2\right]}\frac{\det N_{m,n}}{\det D_{m,n}}$$

For this example, the lowest modes are $n = 6$ and $m = 1$, and the allowable design buckling pressure, psi, including a 5:1 factor of safety is

$$\min\left(P_a\right) = 1.059$$

(c) Using Simplified Equation. The procedure for using the simplified equation per RD-1172.1 is given below. The mechanical properties needed are calculated from

$$\nu_1 = \frac{-\left(ABD^{-1}\right)_{5,4}}{\left(ABD^{-1}\right)_{4,4}} = 0.314 \qquad \nu_2 = \frac{-\left(ABD^{-1}\right)_{5,4}}{\left(ABD^{-1}\right)_{5,5}} = 0.315$$

$$E_{at} = \frac{A_{11}A_{22} - A_{12}^2}{A_{22}t} = 1{,}211{,}778 \qquad E_{af} = \frac{12}{t^3\left(ABD^{-1}\right)_{4,4}} = 1{,}143{,}266$$

$$E_{hf} = \frac{12}{t^3\left(ABD^{-1}\right)_{5,5}} = 1{,}146{,}001$$

where the constants used for calculation are from the *ABD* and *ABD* inverse matrices using the notation shown above for the NASA SP-8007 solution. The allowable design external pressure is then calculated from

$$Z_p = \frac{E_{hf}^{3/2}E_{at}^{1/2}}{E_{af}^2}\left(1 - \nu_1\nu_2\right)^{1/2}\frac{L^2}{Rt} = 398.465 \qquad D_o = 2R$$

$$\gamma = \left(\text{if } Z_p \le 100,\ 1 - 0.001Z_p;\ \text{otherwise } 0.9\right) = 0.9 \qquad F = 5 \qquad KD = 0.84$$

$$P_a = \frac{(KD)0.8531(\gamma)E_{hf}^{3/4}E_{at}^{1/4}t^{5/2}}{\left(1 - \nu_1\nu_2\right)^{3/4}L\left(D_o / 2\right)^{3/2}F} = 0.7498 \text{ psi}$$

where

D_o = outside diameter of shell, in.
E_{af} = axial flexural modulus, psi
E_{at} = axial tensile modulus, psi
E_{hf} = hoop flexural modulus, psi
F = design factor = 5
KD = 0.84, a knockdown factor to cover all data points using the rigorous equations
L = design length of a vessel section, in.
P_a = allowable design buckling pressure
ν_1 = flexural Poisson's ratio in the axial direction
ν_2 = flexural Poisson's ratio in the hoop direction

Copyright ASME International (BPVC)

NONMANDATORY APPENDIX AJ
FORMS REQUIRED BY SECTION X

Table AJ-1
Latest Revision and Year Date of Forms Referenced in This Code

Title	Revision	Year
Form Q-106	C	2017
Form Q-107	C	2017
Form Q-108	C	2017
Form Q-115	C	2017
Form Q-120	C	2017
Form RP-1	D	2017
Form RP-2	D	2017
Form RP-3	E	2017
Form RP-4	D	2017
Form RP-5	C	2017
CP-1	A	2017
CP-2	A	2017
Figure Q-115.1	A	1998

Copyright ASME International (BPVC)

FORM Q-106
RECOMMENDED FORM FOR QUALIFYING THE VESSEL DESIGN AND THE PROCEDURE SPECIFICATION USED IN FABRICATING BAG-MOLDED AND CENTRIFUGALLY CAST FIBER-REINFORCED PLASTIC PRESSURE VESSELS (CLASS I)
(Revision C — 2017)

Specification No. _____ Process _____

A change in any of the essential variables denoted by an asterisk below requires a new Procedure Specification.

*Fiberglass _____
(Manufacturer and Designation)

*Sizing _____
(Manufacturer and Designation)

_____

_____

Form of Reinforcement _____
(Cut Strand, Mats, or Preforms)

Binder for Mats and Preforms _____
(Polyester Emulsion, Polyester in Alcohol, Polyester Powder, etc.)

Weight of Binder _____ Solubility _____
(Percent) (High or Low Resistance to Styrene)

Mats _____
(oz/sq ft; $1\frac{1}{2}$, 2, 3) (gr/m^2; 450, 600, 900)

Preforms _____
(Weight of Binder)

*Resin _____
(Type, Manufacturer, and Designation)

*Curing Agent _____
(Type, Manufacturer, and Designation)

Viscosity of Resin System _____

*Cure

Mandrel _____
(Time) (Temperature) (Pressure)

Mold _____
(Time) (Temperature) (Pressure)

*Post Cure

Furnace _____
(Time) (Temperature)

*Percent Glass in Composite _____

Specific Gravity of Composite (ASTM D 792) _____

*Initial Bag Pressure _____

*Final Bag Pressure _____

Resin Injection Pressure _____

*Weight of Vessel _____

*Barcol Hardnesses and Location _____

_____

Temperature During Lay-up _____

Pumping Procedure _____

(07/17)

Copyright ASME International (BPVC)

FORM Q-106 (CONT'D)
(Revision C — 2017)

*Volumetric Expansion _____ in.^{3} (mm^3)

*Mandrel Rotation, rpm (Centrifugal Casting) _____

_____

Liner _____
(Material) (Thickness)

Qualification

Vessel(s) Serial Number(s) _____

Design Report Number _____

Test Report Number _____

ASME Section X _____
Edition and Addenda (if applicable) Date Code Case No.

We certify that the statements made in this Specification are correct.

Date _____ Signed _____
(Fabricator)

By _____

Certificate of Authorization No. _____ Expires _____

CERTIFICATION BY SHOP INSPECTOR
OF QUALIFICATION OF DESIGN AND FABRICATION PROCEDURE

Procedure Specification of _____ at _____

for _____ process of fabricating vessel(s) described in

_____ Design Specification and _____
(User) (Fabricator)

_____ Design Report Number _____

I, the undersigned, holding a valid commission issued by the National Board of Boiler and Pressure Vessel Inspectors and employed by _____ of _____ have witnessed the tests by which the design of the vessel(s) and the fabrication procedure have been qualified and state that, to the best of my knowledge and belief, these tests of the prototype vessel(s) and the fabrication procedure employed in constructing the vessel(s) satisfy the requirements of Section X of the ASME BOILER AND PRESSURE VESSEL CODE, Fiber-Reinforced Plastic Pressure Vessels.

By signing this certificate, neither the Inspector nor his employer makes any warranty, expressed or implied, concerning the design or procedure covered by the Fabricator's Design Report. Furthermore, neither the Inspector nor his employer shall be liable in any manner for any personal injury or property damage or loss of any kind arising from or connected with this inspection.

Date _____ Commission _____
(National Board Authorized Inspector Number)

_____
(Authorized Inspector's Signature)

(07/17)

Copyright ASME International (BPVC)

FORM Q-107
RECOMMENDED FORM FOR QUALIFYING THE VESSEL DESIGN AND THE PROCEDURE SPECIFICATION USED IN FABRICATING FILAMENT-WOUND FIBER-REINFORCED PLASTIC PRESSURE VESSELS (CLASS I)
(Revision C — 2017)

Procedure Specification No. _____

A change in any of the essential variables denoted by an asterisk below requires a new Procedure Specification.

*Fiber _____
(Manufacturer and Designation)

*Sizing or Finish _____
(Manufacturer and Designation)

*Resin _____
(Type, Manufacturer, and Designation)

*Curing Agent _____
(Type, Manufacturer, and Designation)

Viscosity of Resin System _____ cP (min.) to _____ cP (max.) @ _____ °F (°C)

*Manner of impregnation _____
(Prepreg, Wet Wind, Postpreg)

*Percent Fiber by Weight in Composite _____

*Variables of Winding Process

Helix Angle _____ (measured on cylinder between axis and band path)

Pattern Description _____

Band Density: Helical _____ end/in. (end/mm) Circumferential _____ end/in. (end/mm)

Bandwidth: Helical _____ in. (mm) Circumferential _____ in. (mm)

Tension: Per Strand (End), Roving, or Band (specify which) _____ lb (N) per _____

Method of Control _____ Program _____

Layer Sequence _____
[Note (1)]

Ratio Hel./Circ. in Cylinder _____

*Curing Schedule _____ °F (°C) for _____ hr _____ min
_____ °F (°C) for _____ hr _____ min
_____ °F (°C) for _____ hr _____ min
_____ °F (°C) for _____ hr _____ min
_____ °F (°C) for _____ hr _____ min

Manner of Measuring Temperature: Oven Air _____ Winding Surface _____

Mandrel _____ Other _____
(Describe)

*Liner _____
(Manufacturer and Designation) (Thickness)

_____
(Method of Installing Liner)

NOTE:
(1) Use X to indicate layer of helical winding
(a) "O" to indicate full layer of circumferential windings (down and back)
(b) "o" to indicate half-layer of circumferential windings (one pass)
Where a range of values or a tolerance applies, state the applicable range or tolerance.

(07/17)

Copyright ASME International (BPVC)

FORM Q-107 (CONT'D)
(Revision C — 2017)

Manner of Reinforcing Openings _____
(Describe)

*Pole Pieces _____
(Material)

_____
(Method of Installing: Wound-in, Bonded, etc.)

_____
(Auxiliary Uses)

Head Contour _____
(Describe)

Type of Mandrel _____
(Describe)

Type of Winding Machine _____
(Describe)

*Weight of Vessel _____

*Barcol Hardnesses and Location _____

*Volumetric Expansion _____

Qualification:

Vessel(s) Serial Number(s) _____

Design Report Number _____

Test Report Number _____

ASME Section X _____
Edition and Addenda (if applicable) Date Code Case No.

We certify that the statements made in this Specification are correct.

Date _____ Signed _____
(Fabricator)

By _____

Certification of Authorization No. _____ Expires _____

CERTIFICATION BY SHOP INSPECTOR
OF QUALIFICATION OF DESIGN AND FABRICATION PROCEDURE

Procedure Specification of _____ at _____
for _____ process of fabricating vessel(s) described in
_____ Design Specification and _____
(User) (Fabricator)
_____ Design Report Number _____

I, the undersigned, holding a valid commission issued by the National Board of Boiler and Pressure Vessel Inspectors and employed by _____ of _____ have witnessed the tests by which the design of the vessel(s) and the fabrication procedure have been qualified and state that, to the best of my knowledge and belief, these tests of the prototype vessel(s) and the fabrication procedure employed in constructing the vessel(s) satisfy the requirements of Section X of the ASME BOILER AND PRESSURE VESSEL CODE, Fiber-Reinforced Plastic Pressure Vessels.

By signing this certificate, neither the Inspector nor his employer makes any warranty, expressed or implied, concerning the design procedure covered by the Fabricator's Design Report. Furthermore, neither the Inspector nor his employer shall be liable in any manner for any personal injury or property damage or loss of any kind arising from or connected with this inspection.

Date _____ Commission _____
(National Board Authorized Inspector Number)

_____
(Authorized Inspector's Signature)

(07/17)

Copyright ASME International (BPVC)

FORM Q-108
RECOMMENDED FORM FOR QUALIFYING THE VESSEL DESIGN AND THE PROCEDURE SPECIFICATION USED IN FABRICATING CONTACT-MOLDED, FIBER-REINFORCED PLASTIC PRESSURE VESSELS (CLASS I)
(Revision C — 2017)

(A change in any of the essential variables denoted by an asterisk below requires a new Procedure Specification.)

I. Procedure Specification Number _____

II. Vessel or Vessel Part Identification _____
(Use separate sheet for each separate part or component)

III. Materials for Vessel/Vessel Part or Secondary Overlay

Reinforcements	*Fiber Type	*Fiber Form	*Manufacturer	*Manufacturing No.
1. Material No. 1				
2. Material No. 2				
3. Material No. 3				
4. Material No. 4				

Resin System	Material Type	Manufacturer	Manufacturing No.
*1. Resin			
*2. Catalyst			
*3. Promoter			

IV. Laminate Construction for Vessel or Vessel Part (Use separate sheet for each part)

*Total Number of Plies _____ Total Thickness _____

*Ply Sequence and Orientation (Ply No. 1 next to process)

Ply No.	Fiber Material No.	Fiber Orientation	Reference Axis

(Use additional sheets if necessary)

*Cure Method _____ *Post Cure _____ °F (°C) _____ hr

*Design Barcol Hardness _____ +/− _____

*Design Fiber by Weight _____ % +/− _____ %

V. Assembly of Vessel Parts

Bond to Join Vessel Part A _____ to Vessel Part B _____
(Use separate sheet for each Joint)

*Method of Surface Preparation for Secondary Overlay _____

*Distance of S.P. From Mating Joint: Part A _____ in. Part B _____ in.

Overlay Construction — Interior Surface (if applicable)

*Number of Plies _____ Thickness _____ *Overlay Length _____

(07/17)

Copyright ASME International (BPVC)

FORM Q-108 (CONT'D)
(Revision C — 2017)

*Ply Sequence and Orientation (Ply No. 1 next to joined parts)

Ply No.	Fiber Material No.	Fiber Orientation	Reference Axis

(Use additional sheets if necessary)

*Cure Method _____ *Post Cure _____ °F (°C) _____ hr

*Design Barcol Hardness _____ +/− _____

*Design Fiber by Weight _____ % +/− _____ %

Overlay Construction — Exterior Surface

*Number of Plies _____ Thickness _____ *Overlay Length _____

*Ply Sequence and Orientation (Ply No. 1 next to joined parts)

Ply No.	Fiber Material No.	Fiber Orientation	Reference Axis

(Use additional sheets if necessary)

*Cure Method _____ *Post Cure _____ °F (°C) _____ hr

*Design Barcol Hardness _____ +/− _____

*Design Fiber by Weight _____ % +/− _____ %

VI. Summary

Component/Part Fabrication

No.	Part Identification	Procedure Specification
1		
2		
3		
4		
5		
6		

(07/17)

Copyright ASME International (BPVC)

FORM Q-108 (CONT'D)
(Revision C — 2017)

Component/Part Assembly No.	Part A	To	Part B	Procedure Specification No.
1				
2				
3				
4				
5				
6				

*Vessel Volumeric Expansion _____ $in.^3$ (mm^3)

*Vessel Weight _____

Qualification

Vessel(s) Serial Number(s) _____

Design Report Number _____

Test Report Number _____

ASME Section X _____
Edition and Addenda (if applicable) Date Code Case No.

We certify that the statements made in this Specification are correct.

Date _____ Signed _____
(Fabricator)

By _____

Certificate of Authorization No. _____ Expires _____

CERTIFICATION BY SHOP INSPECTOR
OF QUALIFICATION OF DESIGN AND FABRICATION PROCEDURE

Procedure Specification of _____ at _____
for _____ process of fabricating vessel(s) described in
_____ Design Specification and _____
(User) (Fabricator)

Design Report number _____

I, the undersigned, holding a valid commission issued by the National Board of Boiler and Pressure Vessel Inspectors and employed by _____ of _____ have inspected the components described in Part I of the Procedure Specification and have examined the Quality Control records documenting its fabrication and state that, to the best of my knowledge and belief, the Fabricator has fabricated the vessel component(s) in accordance with this Procedure Specification and the requirements of Section X of the ASME BOILER AND PRESSURE VESSEL CODE, Fiber-Reinforced Plastic Pressure Vessels.

By signing this certificate neither the Inspector nor his employer makes any warranty, expressed or implied, concerning the design procedure covered by the Fabricator's Design Report. Furthermore, neither the Inspector nor his employer shall be liable in any manner for any personal injury or property damage or loss of any kind arising from or connected with this inspection.

Date _____ Commission _____
(National Board Authorized Inspector Number)

_____
(Authorized Inspector's Signature)

(07/17)

Copyright ASME International (BPVC)

FORM Q-115
RECOMMENDED FORM FOR QUALIFYING THE DESIGN AND THE PROCEDURE SPECIFICATION USED IN ADHESIVE BONDING OF PARTS OF FIBER-REINFORCED PLASTIC PRESSURE VESSELS (CLASS I)
(Revision C — 2017)

Procedure Specification Number _____

A change in any of the essential variables denoted by an asterisk below requires a new Procedure Specification.

∗ Adhesive _____
(Manufacturer and Designation)

∗ Curing Agent _____
(Type, Manufacturer, and Designation)

∗ Preparation of Surfaces _____
(Machining, Grinding, Degreasing)

∗ Application of Adhesive _____
(Dip) (Brush)

∗ Cure _____
(Time) (Temperature)

Laminate Used in Test

(a) From Cylindrical Shell: Outside Diameter _____ Wall Thickness _____

Length of Lap† L _____ Fiber Content _____ Other Information _____

(b) From Fabricated Flat Laminate: Thickness _____ Fiber Content _____

Length of Lap† L _____ Other Information _____

†As required for tensile test per Fig. Q-115.1.

REDUCED SECTION TENSION SPECIMEN OF BONDED JOINT DIMENSIONED SAME AS TYPE 1 SPECIMEN OF ASTM D 638

U.S. Customary Units				SI Units			
Thickness of Wall, in.	Reduced Width, in.	Width Grip, in.	Overall Length, in.	Thickness of Wall, mm	Reduced Width, mm	Width Grip, mm	Overall Length, mm
¼ or under	½	¾	8.5	6 or less	13	19	216
Over ¼ to ½, incl.	¾	1⅛	9.7	Over 6 to 13, incl.	19	28	246
Over ½ to 1, incl.	1	1½	12	Over 13 to 25, incl.	25	38	305

CONDITION OF SPECIMEN

Specimen shall be wiped dry; no other conditioning is required.

RECORD OF SPECIMENS TESTED

Specimen No.	Thickness	Reduced Width	Length of Bond Overlap	Area of Bond	Total Load, lb	Shear Stress
1						
2						
3						

(07/17)

Copyright ASME International (BPVC)

FORM Q-115 (CONT'D)
(Revision C — 2017)

Qualification of Vessel With Bonded Joints

Vessel(s) Serial Number(s) _____

Design Report Number _____

Test Report Number _____

ASME Section X _____ _____
[Edition and Addenda (if applicable) Date] (Code Case Number)

We certify that the statements made in this Specification are correct:

Date _____ Signed _____
(Fabricator)

By _____

Certificate of Authorization Number _____ Expires _____

CERTIFICATION BY SHOP INSPECTOR
OF QUALIFICATION OF ADHESIVE-BONDING PROCEDURE

Procedure Specification of _____ at _____

for _____ process of fabricating vessel(s) described in

_____ Design Specification and _____
(User) (Fabricator)

_____ Design Report Number _____

I, the undersigned, holding a valid commission issued by the National Board of Boiler and Pressure Vessel Inspectors and employed by _____ of _____ have witnessed the tests by which the design of the joint(s) and the adhesive-bonding procedure have been qualified and state that, to the best of my knowledge and belief, these tests of the prototype joint(s) and the adhesive-bonding procedure employed in constructing the vessel(s) satisfy the requirements of Section X of the ASME BOILER AND PRESSURE VESSEL CODE, Fiber-Reinforced Plastic Pressure Vessels.

By signing this certificate, neither the Inspector nor his employer makes any warranty, expressed or implied, concerning the design or procedure covered by the Fabricator's Design Report. Furthermore, neither the Inspector nor his employer shall be liable in any manner for any personal injury or property damage or loss of any kind arising from or connected with this inspection.

Date _____ Commission _____
(National Board Authorized Inspector Number)

_____
(Authorized Inspector's Signature)

(07/17)

Copyright ASME International (BPVC)

Figure Q-115.1
Schematic Views of Permissible Joint Designs for Adhesive-Bonded Cylinder Joints for Tensile Tests
(Revision A — 1998)

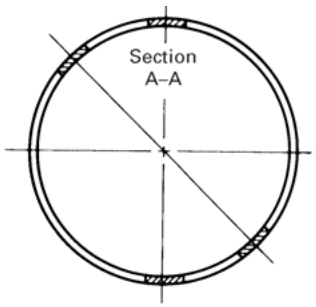

(a) Cut Samples From Section of Vessel or From Sample Section

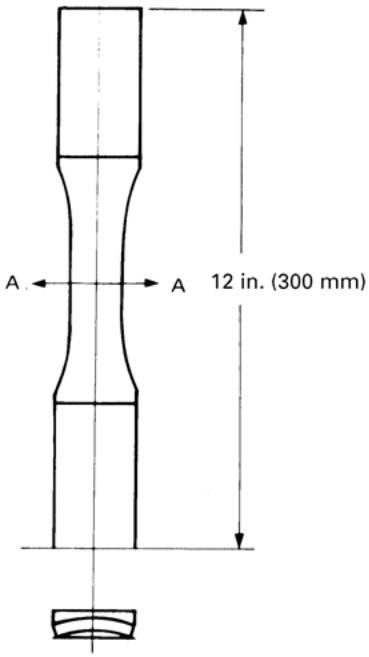

(b) Longitudinal Tensile Test Samples Cut From Vessel Side Wall [Note (1)]

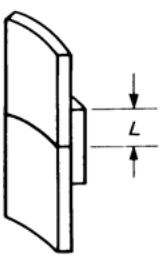

(c) [Note (2)]

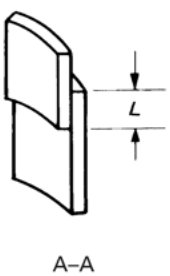

(d) [Note (2)]

Copyright ASME International (BPVC)

Figure Q-115.1
Schematic Views of Permissible Joint Designs for Adhesive-Bonded Cylinder Joints for Tensile Tests
(Revision A — 1998) (Cont'd)

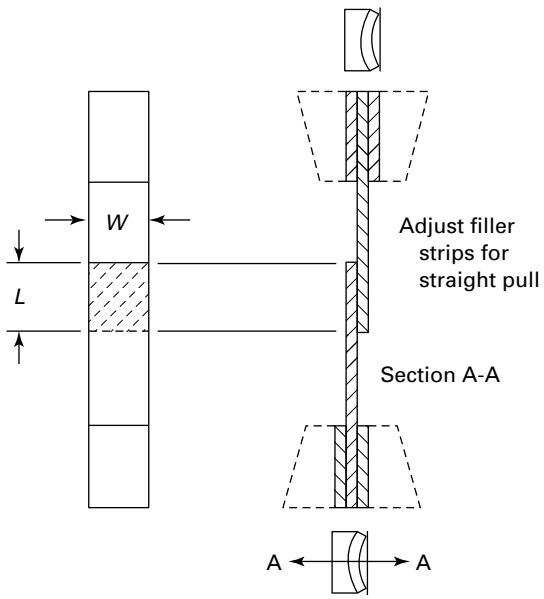

(e) Specimen Fabricated From Cylinder of Vessel [Note (3)]

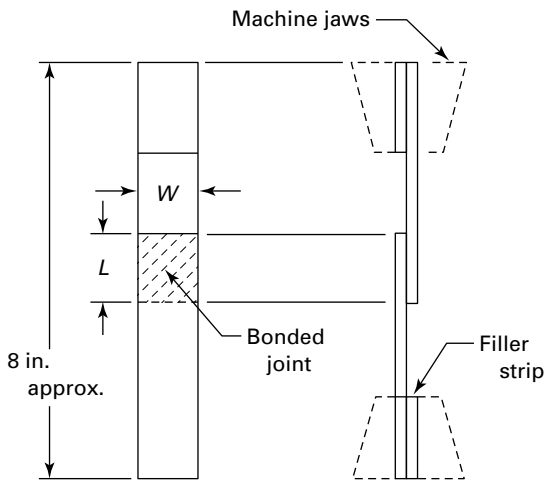

(f) Specimen Fabricated From Flat Laminate [Note (4)]

Record of Specimens Tested					
Specimen	Width, *W* [1 in. (25 mm) Recommended]	Length, *L* [2 in. (50 mm) Recommended]	Area of Bond, in.^{2} (mm ^{2})	Load Failure, lb (N)	Shear Strength of Joint, psi (MPa)
1					
2					
3					
4					
5					
6					
Test Machine Number and Make ———————— Pull Rate ————————————					

(1) Bonded filler pads for proper jaw grip on tensile machine (if required on small diameter and thick specimens).
(2) $L = PD/4S$
where
D = vessel diameter, in. (mm)
L = length, in. (mm)
P = burst pressure, psi (MPa)
S = shear strength, psi (MPa)
(3) Use fillers for curved sections.
(4) Fillers not required for thin laminates that can be pulled into flat profile by machine jaws.

Copyright ASME International (BPVC)

FORM Q-120
PROCEDURE SPECIFICATION FOR CLASS II VESSELS
(Revision C — 2017)
Part I — Fabrication

PROCEDURE SPECIFICATION NUMBER: _____

NOTE: Procedure Specification Form Q-120 for Class II vessels consists of three parts. Part I, Fabrication, shall be completed for each separately fabricated reinforced plastic vessel part. It shall specify the materials, ply sequence, ply orientation, and procedure used to fabricate the part. Part I must be accompanied by Parts II and III.

Essential design variables shall be established during design. Any deviation during fabrication must be so noted and qualified by the Design Engineer.

I. FABRICATION IDENTIFICATION DATA

A. Vessel Identification

Fabricator Name: _____ Fabricator Vessel No.: _____
Name of User: _____ User Vessel Number: _____

B. Vessel Part Identification

Part Name or Number: _____ Date Fabricated: _____
Fabricator Procedure No.: _____ Procdure Date: _____
(Ref. RQ-110 and Appendix 1, 1-100)

C. Registered Engineer Certifying the Design _____

II. ESSENTIAL DESIGN VARIABLES (To be established during design)

A. Materials for Vessel Part

Fiber Reinforcements	Manufacturer	Mfg. No.	Material Type (Glass, etc.)	Material Form (Mat, etc.)
1. Material No. 1				
2. Material No. 2				
3. Material No. 3				

Resin System	Manufacturer	Mfg. No.	Material Type (Epoxy, etc.)
1. Resin			
2. Catalyst			
3. Promoter			

B. Part Fabrication

1. Liner (if applicable)
   a. Composite Liner (if applicable)
      Ply No. _____ to Ply No. _____
      Thickness _____
   b. Thermoplastic Liner (if applicable)
      Material _____ Manufacturer _____ Mfg. No. _____
      Thickness _____ Bonding Method _____

(07/17)

Copyright ASME International (BPVC)

FORM Q-120 (CONT'D)
PROCEDURE SPECIFICATION FOR CLASS II VESSELS
(Revision C — 2017)
Part I — Fabrication (Cont'd)

2. Laminate Construction: _____
(filament wound, contact molded, or both)

Number of Plies _____ Total Thickness _____

Ply Sequence and Orientation (No. 1 ply is next to joined parts)

Ply No.	Fiber Material No.	Fiber Orientation	Reference Axis

(Use additional sheets if necessary)

3. Cure Method _____ Post Cure _____ °F (°C) _____ hr _____

4. Design Barcol Hardness _____ ± _____

5. Design Percent Fiber by Weight (Filament Wound) _____ % ± _____ %

6. Design Percent Fiber by Weight (Contact Molded) _____ % ± _____ %

7. Filament Winding: Bandwidth _____ Spacing _____

8. Fillers/Pigments:

Material	Use	Location

III. ENGINEERING CONSTANTS

Documentation of Lamina Properties: Material Property Data Report No. _____

IV. QUALIFICATION

Part _____ for Vessel No. _____

Date Fabricated: _____ Date Tested: _____

Design Report No.: _____

Acceptance Test Report No.: _____

ASME Section X _____ _____

Edition and Addenda (if applicable) Date Code Case No.

(07/17)

Copyright ASME International (BPVC)

FORM Q-120 (CONT'D)
PROCEDURE SPECIFICATION FOR CLASS II VESSELS
(Revision C — 2017)
Part I — Fabrication (Cont'd)

A. Identification of Materials Used in Fabrication

1. Reinforcements — Batch Number

a. Material No. 1					
b. Material No. 2					
c. Material No. 3					
2. Resin					
3. Catalyst					
4. Promoters					

B. Resin Data (for each batch number)

1. Batch No.					
2. Resin Viscosity					
3. Promotion Rate (ppm)					
4. Catalyst Rate (ppm)					
5. Gel Time (min.)					

C. Fabrication Compliance [see RF-110(c)]

List and explain any variations from the essential design variables listed in Section II above. The Fabricator shall document as part of his Quality Control System (Appendix 1) that the essential variables established for design are complied with during fabrication.

1. _____
2. _____
3. _____

(Use additional sheets if necessary)

D. Results of Quality Checks (RQ-140)

1. Visual check per ASME Section V, Article 28 _____
2. Thickness and Dimensional Checks _____
3. Barcol Hardness Check _____
4. Thermoplastic Liner Integrity _____

(07/17)

Copyright ASME International (BPVC)

FORM Q-120 (CONT'D)
PROCEDURE SPECIFICATION FOR CLASS II VESSELS
(Revision C — 2017)
Part I — Fabrication (Cont'd)

E. Qualification Test (Attach Acceptance Test Report)

Passed: _____ Failed: _____

F. Certification

We certify that the statements made in Part I of this Specification are correct.

Date: _____ Signed: _____
(Fabricator)

By: _____

Certificate of Authorization No.: _____ Expires: _____

CERTIFICATION BY SHOP INSPECTOR
OF QUALIFICATION OF DESIGN AND FABRICATION PROCEDURE

Procedure Specification of _____ at _____
for _____ process of fabricating vessel(s) described in
_____ Design Specification and _____
(User) (Fabricator)

Design Report number _____

I, the undersigned, holding a valid commission issued by the National Board of Boiler and Pressure Vessel Inspectors and employed by _____ of _____ have inspected the components described in Part I of the Procedure Specification and have examined the Quality Control records documenting its fabrication and state that, to the best of my knowledge and belief, the Fabricator has fabricated the vessel component(s) in accordance with this Procedure Specification and the requirements of Section X of the ASME Boiler and Pressure Vessel Code, Fiber-Reinforced Plastic Pressure Vessels.

By signing this certificate neither the Inspector nor his employer makes any warranty, expressed or implied, concerning the design or procedure covered by the Fabricator's Design Report. Furthermore, neither the Inspector nor his employer shall be liable in any manner for any personal injury or property damage or loss of any kind arising from or connected with this inspection.

Date _____ Commission _____
(National Board Authorized Inspector Number)

_____
(Authorized Inspector's signature)

(07/17)

Copyright ASME International (BPVC)

FORM Q-120 (CONT'D)
PROCEDURE SPECIFICATION FOR CLASS II VESSELS
(Revision C — 2017)
Part II — Assembly

PROCEDURE SPECIFICATION NUMBER: _____

NOTE: Procedure Specification Form Q-120 for Class II vessels consists of three parts. Part II, Assembly, shall be completed for each secondary lay-up required to join two or more separately fabricated parts. It shall detail the materials, dimensions, and ply sequences of the secondary overlay. Part II, if applicable, must be accompanied by Parts I and III.

Essential design variables shall be established during design. Any deviation during fabrication must be so noted and qualified.

I. ASSEMBLY IDENTIFICATION DATA

A. Vessel Identification

Fabricator Name: _____ Fabricator Vessel No.: _____
Name of User: _____ User Vessel Number: _____

B. Secondary Bond Joint Identification

Fabricator Procedure No.: _____ Procedure Date: _____
Bond to Join Vessel Part A: _____ to Vessel Part B: _____

II. ESSENTIAL DESIGN VARIABLES

A. Materials for Secondary Overlay

Fiber Reinforcements	Manufacturer	Mfg. No.	Material Type (Glass, etc.)	Material Form (Mat, etc.)
1. Material No. 1				
2. Material No. 2				
3. Material No. 3				

Resin System	Manufacturer	Mfg. No.	Material Type (Epoxy, etc.)
1. Resin			
2. Catalyst			
3. Promoter			

B. Surface Preparation

1. Method _____

2. Distance From Mating Joint: Part A _____ in.
Part B _____ in.

(07/17)

Copyright ASME International (BPVC)

FORM Q-120 (CONT'D)
PROCEDURE SPECIFICATION FOR CLASS II VESSELS
(Revision C — 2017)
Part II — Assembly (Cont'd)

C. Overlay Construction

1. Interior Surface (if applicable)

a. Number of Plies _____ Thickness _____

b. Length of Overlay (do not include taper): Part A _____ Part B _____

c. Ply Sequence and Orientation (No. 1 ply is next to joined parts)

Ply No.	Fiber Material No.	Fiber Orientation	Reference Axis

(Use additional sheets if necessary)

d. Overlay Termination: Taper over a distance of _____

e. Percent Fiber Content by Weight _____

f. Barcol Hardness _____

2. Exterior Surface

a. Number of Plies _____ Thickness _____

b. Length of Overlay (do not include taper): Part A _____ Part B _____

c. Ply Sequence and Orientation (No. 1 ply is next to joined parts)

Ply No.	Fiber Material No.	Fiber Orientation	Reference Axis

(Use additional sheets if necessary)

d. Overlay Termination: Taper over a distance of _____

e. Percent Fiber Content by Weight _____

f. Barcol Hardness _____

(07/17)

Copyright ASME International (BPVC)

FORM Q-120 (CONT'D)
PROCEDURE SPECIFICATION FOR CLASS II VESSELS
(Revision C — 2017)
Part II — Assembly (Cont'd)

III. QUALIFICATION

Secondary Overlay to Join Part A: _____ to Part B: _____

Design Report No. _____ Test Report No. _____

ASME Section X _____ _____
Edition and Addenda (if applicable) Date — Code Case No.

A. Identification of Materials Used in Assembly

1. Reinforcements	Batch Number				
a. Material No. 1					
b. Material No. 2					
c. Material No. 3					
2. Resin					
3. Catalyst					
4. Promoters					

B. Resin Data (for each batch number)

1. Batch No.					
2. Resin Viscosity					
3. Promotion Rate (ppm)					
4. Catalyst Rate (ppm)					
5. Gel Time (min.)					

C. Fabrication Compliance [see RF-110(c)]

List and explain any variations from the essential design variables listed in Section II of this form (Part II). The Fabricator shall document as part of his Quality Control System (Appendix 1) that the essential variables established for design are complied with during fabrication.

1. _____

2. _____

3. _____

(Use additional sheets if necessary)

D. Certification

We certify that the statements made in Part II of this Specification are correct.

Date: _____ Signed: _____
(Fabricator)

By: _____

Certificate of Authorization No.: _____ Expires: _____

(07/17)

Copyright ASME International (BPVC)

FORM Q-120 (CONT'D)
PROCEDURE SPECIFICATION FOR CLASS II VESSELS
(Revision C — 2017)
Part II — Assembly (Cont'd)

CERTIFICATION BY SHOP INSPECTOR OF QUALIFICATION OF DESIGN AND FABRICATION PROCEDURE

Procedure Specification of _____ at _____
for _____ process of fabricating vessel(s) described in
_____ Design Specification and _____
(User) (Fabricator)

_____ Design Report number _____

I, the undersigned, holding a valid commission issued by the National Board of Boiler and Pressure Vessel Inspectors and employed by _____ of _____ have inspected the assembly joint of the components described in Part II of the Procedure Specification and have examined the Quality Control records documenting this assembly and state that, to the best of my knowledge and belief, the Fabricator has assembled the components to satisfy the requirements of Section X of the ASME Boiler and Pressure Vessel Code, Fiber-Reinforced Plastic Pressure Vessels.

By signing this certificate neither the Inspector nor his employer makes any warranty, expressed or implied, concerning the design or procedure covered by the Fabricator's Design Report. Furthermore, neither the Inspector nor his employer shall be liable in any manner for any personal injury or property damage or loss of any kind arising from or connected with this inspection.

Date _____ Commission _____
(National Board Authorized Inspector Number)

_____
(Authorized Inspector's signature)

(07/17)

Copyright ASME International (BPVC)

FORM Q-120 (CONT'D)
PROCEDURE SPECIFICATION FOR CLASS II VESSELS
(Revision C — 2017)
Part III — Summary

PROCEDURE SPECIFICATION NUMBER: _____

NOTE: Procedure Specification Form Q-120 for Class II vessels consists of three parts. Part III, Summary, shall compile the various fabrication procedures used to fabricate the individual parts of the vessel and then join them into a completed vessel assembly. Part III must be accompanied by Parts I and II.

A. VESSEL IDENTIFICATION

Fabricator Name: _____ Fabricator Vessel No.: _____
Name of User: _____ User Vessel Number: _____

B. SUMMARY OF FABRICATION PROCEDURES (Part I)

No.	Part Identification	Fabricator's Procedure No.
1		
2		
3		
4		
5		
6		

C. SUMMARY OF ASSEMBLY PROCEDURES (Part II)

No.	Part A	to	Part B	Fabricator's Procedure No.
1				
2				
3				
4				
5				
6				

D. QUALIFICATION

We certify that the statements made in Part III of this Specification are correct.

Date: _____ Signed: _____
(Fabricator)

By: _____

Certificate of Authorization No.: _____ Expires: _____

ASME Section X _____ _____
Edition and Addenda (if applicable) Date Code Case No.

(07/17)

Copyright ASME International (BPVC)

FORM Q-120 (CONT'D)
PROCEDURE SPECIFICATION FOR CLASS II VESSELS
(Revision C — 2017)
Part III — Summary (Cont'd)

CERTIFICATION BY SHOP INSPECTOR
OF QUALIFICATION OF DESIGN AND FABRICATION PROCEDURE

Procedure Specification of _____ at _____
for _____ process of fabricating vessel(s) described in
_____ Design Specification and _____
(User) (Fabricator)

Design Report number _____

I, the undersigned, holding a valid commission issued by the National Board of Boiler and Pressure Vessel Inspectors and employed by _____
of _____
have witnessed the tests by which the design of the vessel(s) and the fabrication procedure have been qualified and state that, to the best of my knowledge and belief, these tests and the fabrication procedure employed in constructing the vessel(s) satisfy the requirements of Section X of the ASME Boiler and Pressure Vessel Code, Fiber-Reinforced Plastic Pressure Vessels.

By signing this certificate neither the Inspector nor his employer makes any warranty, expressed or implied, concerning the design or procedure covered by the Fabricator's Design Report. Furthermore, neither the Inspector nor his employer shall be liable in any manner for any personal injury or property damage or loss of any kind arising from or connected with this inspection.

Date _____ Commission _____
(National Board Authorized Inspector Number)

_____
(Authorized Inspector's signature)

(07/17)

Copyright ASME International (BPVC)

FORM RP-1
FABRICATOR'S DATA REPORT FOR FIBER-REINFORCED PLASTIC PRESSURE VESSELS (CLASS I)
(Revision D — 2017)
As Required by the Provisions of the ASME Boiler and Pressure Vessel Code

1. Fabricated and certified by ① (name and address of Fabricator)
2. Fabricated for ② (name and address of Purchaser)
3. Location of installation ③ (name and address)
4. Type ④ (horiz. or vert. vessel) Vessel No. (Manufacturer's serial) (CRN) ⑤ (dwg. no.) ⑥ (National Bd. no.) Year Built
5. Vessel fabricated in accordance with Design Specification no. ⑦ Date
   and Procedure Specification no. Date
6. ASME Section X ⑧ [Edition and Addenda (if applicable) Date] ⑨ (Code Case No.)
7. Tests on prototype vessel conducted and certified by
8. Fabricated for
   Maximum allowable working pressure ⑩ psi (kPa) at maximum allowable temperature
   Minimum allowable temperature [when less than −20°F (−29°C)]
   Hydrostatic, Pneumatic, or Combination Test pressure ⑪. Total weight of completed vessel
9. SHELL: Type ⑫ (bag molded, centrif. cast, filament wound) Nominal thickness ⑬
   Diameter Length Barcol hardness ⑭
10. HEADS: Type ⑮ (molded, centrifugally cast, filament wound)
    Attachment ⑯ (integral, adhesive bonding, bolted, quick opening, etc.)

(a)

Location (Top, Bottom, Ends) ⑰	Nominal Thickness	Barcol Hardness	Nominal Weight	Shape or Contour (Describe, giving radii, angle, ratios, where appropriate)
(1)				
(2)				

(b) If bolted, bolts used ⑱ (Material, Spec. no., T. S., size, number)
(1)
(2)

(c) If quick opening or other ⑲ (Describe or attach sketch)
(1)
(2)

(d) If filament wound, describe pole pieces or head fittings
(1) ⑳
(2)

11. SAFETY OR SAFETY RELIEF VALVE OUTLETS: Number ㉑ Size
    Location

(07/17)

Copyright ASME International (BPVC)

FORM RP-1 (Back)
(Revision D — 2017)

12. NOZZLES: (22)

Purpose (Inlet, Outlet, Drain)	Number	Diameter or Size	Type	Material	Thickness	Reinforcement Material	How Attached

Attached _____ (where and how)

13. INSPECTION OPENINGS: (23)

Manholes: No. _____ Size _____ Location _____
Handholes: No. _____ Size _____ Location _____
Threaded: No. _____ Size _____ Location _____

14. SUPPORTS: Skirt _____ (24) (yes or no) Lugs _____ (number) Legs _____ (number) Other _____ (describe)

Attached _____ (where and how)

15. REMARKS _____ (25)

(Brief description of purpose of the vessel, such as air tank, water tank, LPG storage, etc. *If description of the purpose of the vessel does not clearly indicate the contents of the vessel, state what the contents are to be.* Describe any unusual features of design or construction not covered by items 3 to 14 inclusive.)

(26) CERTIFICATE OF COMPLIANCE

We certify the statements in this Data Report to be correct.

Date _____ Signed _____ (Fabricator) by _____ (authorized representative)

Our Certificate of Authorization No. _____ to use the Certification Mark with RP Designator expires _____ (date)

(27) CERTIFICATE OF SHOP INSPECTION

Vessel made by _____ at _____

I, the undersigned, holding a valid commission issued by the National Board of Boiler and Pressure Vessel Inspectors and employed by _____ of _____ have inspected the pressure vessel described in this Fabricator's Data Report on _____ (date) and state that, to the best of my knowledge and belief, the Fabricator has constructed this pressure vessel in accordance with the applicable Sections of the ASME BOILER AND PRESSURE VESSEL CODE.

By signing this certificate, neither the Inspector nor his employer makes any warranty, expressed or implied, concerning the pressure vessel described in this Fabricator's Data Report. Furthermore, neither the Inspector nor his employer shall be liable in any manner for any personal injury or property damage or loss of any kind arising from or connected with this inspection.

Date _____

_____ (Authorized Inspector's signature) Commission _____ (28) (National Board Authorized Inspector Number)

(07/17)

Copyright ASME International (BPVC)

Table AJ-2
Guide for Completing Form RP-1
(Revision E — 2017)

Reference to Circled Numbers in the Form	Description
(1)	Name and street address of Fabricator, i.e., maker of all components not covered by Partial Data Reports.
(2)	Name and address of Purchaser and/or Owner.
(3)	Name and street address of USER, where vessel is to be installed. If not known, so indicate; e.g., not known — built for stock.
(4)	Type of vessel, such as vertical or horizontal vessel, including method of support.
(5)	Fabricator's serial number (one vessel on one report). CRN lines are for Canadian Registration Number and the number of the drawing approved by the Provincial Authorities.
(6)	National Board number from Fabricator's series of N.B. numbers or State number if User inspected vessel. If USER vessel, strike out National Board and show name of State.
(7) (10)	These are the Fabricator's Specification numbers.
(8)	ASME Code, Section X, Edition (e.g., 1998) and Addenda (e.g., A98, A99, etc., if applicable) used for fabrication.
(9)	All Code Case numbers and revisions used for fabrication must be listed. Where more space is needed, use Remarks section or list on a supplemental page.
(11)	Test Pressure must conform to RT-450 or RT-460, depending on type of test method used.
(12)	Specify bag molded, centrifugally cast, or filement wound, or a combination of these, as bag molded and helically wound or centrifugally cast plus level (or circle) wound, if the design is a combination.
(13)	The thickness of the laminate. Spell out liner thickness (if used) as a separate item.
(14)	The Barcol hardness is required for qualification vessels (RT-221) and recorded.
(15)	State the process or a combination of the processes along with the shape, as elliptical, spherical, etc., and list the ratio of major to minor axis if elliptical. If heads are flat (Article RD-7), list material and thickness.
(16)	The details of adhesive bonding, bolted, or quick opening to be recorded in the Data Report.
(17)	The top and bottom heads for vertical vessels and ends for horizontally mounted vessels.
(18)	Bolts used to secure removable head or heads of vessel.
(19)	Safety precautions to be spelled out for quick opening design (Article RD-8).
(20)	Show design of pole pieces wound in on axis of rotation. Show design of fittings and method of holding the fittings in place if located other than on axis of rotation (not permitted for 3,000 psi [20 MPa] operation design). In all cases, design adequacy is mandatory.
(21)	Indicate nozzle or other opening which is designated for pressure relief device.
(22)	Show other nozzles and openings and design of attachment.
(23)	Show openings designated for inspection and design of attachment.
(24)	Indicate provisions for vessel support. If attached, show design; vessels must be qualified on the vessel support listed in the Data Report.
(25)	It is important under Remarks to be very complete in listing concentration temperature of contents of the vessel along with surface of the vessel used to prevent corrosion. The Fabricator of the vessel line or resin along with Specification number and type is important for future reference, as vessel may be used for contents other than the contents for which the original design was intended. For attached Partial Data Reports, list the part name, the name of the Fabricator, and the serial number of the part.
(26)	Certificate of Compliance block is to show name of Fabricator as shown on the ASME Certificate of Authorization. This should be signed by chief Inspector, Manager of Quality Control, or a like person.
(27)	Certificate of Shop Inspection is to be completed by the Fabricator and signed by the Authorized Inspector who performs the shop inspection.
(28)	The National Board Authorized Inspector number shall be shown.

GENERAL NOTE: Any quantity to which units apply shall be entered on the Fabricator's Data Report with the chosen units.

Copyright ASME International (BPVC)

FORM RP-2
FABRICATOR'S PARTIAL DATA REPORT (CLASS I)
A Part of a Fiber-Reinforced Plastic Pressure Vessel Fabricated by One Manufacturer for Another Manufacturer
(Revision D — 2017)
As Required by the Provisions of the ASME Boiler and Pressure Vessel Code

1. (a) Fabricated and certified by ① (name and address of Fabricator of part)

   (b) Fabricated for ② (name and address of Purchaser of vessel)

2. Identification—Fabricator's serial no. of part ③

3. (a) Constructed according to Drawing no. ④ Dwg. prepared by ⑤

   (b) Description of part fabricated and inspected ⑥

4. Part fabricated in accordance with Procedure Specification no. _____ Date _____

5. ASME Section X ⑦ (Edition and Addenda (if applicable) Date) ⑧ (Code Case No.)

6. SHELL: Type ⑨ (bag molded, centrifugally cast, filament wound) Nominal thickness _____

   Nominal weight _____ Diameter _____

   Length _____ Barcol hardness _____

7. HEADS: Type ⑩ (molded, centrifugally cast, filament wound)

   Attachment ⑪ (integral, adhesive bonding, bolted, quick opening, etc.)

(a)

Location (Top, Bottom, Ends)	Nominal Thickness	Barcol Hardness	Nominal Weight	Shape or Contour (Describe, giving radii, angle, ratios, where appropriate)
(1) ⑫				
(2)				

(b) If bolted, bolts used ⑬
(Material, Spec. no., T. S., size, number)
(1) _____
(2) _____

(c) If quick opening or other ⑭
(Describe or attach sketch)
(1) _____
(2) _____

(d) If filament wound, describe pole pieces or head fittings ⑮
(1) _____
(2) _____

8. Fabricated for
   Maximum allowable working pressure _____ at maximum allowable temperature _____
   Minimum allowable temperature [when less than −20°F (−29°C)] _____

9. SAFETY VALVE OUTLETS: Number ⑯ Size _____ Location _____

10. NOZZLES ⑰

Purpose (Inlet, Outlet, Drain)	Number	Diameter or Size	Type	Material	Thickness	Reinforcement Material	How Attached

(07/17)

Copyright ASME International (BPVC)

FORM RP-2 (Back)
(Revision D — 2017)

11. INSPECTION OPENINGS (18)

Manholes: No. _____ Size _____ Location _____
Handholes: No. _____ Size _____ Location _____
Threaded: No. _____ Size _____ Location _____

12. SUPPORTS: (19) Skirt _____ (yes or no) Lugs _____ (number) Legs _____ (number) Other _____ (describe)

Attached _____ (where and how)

13. REMARKS _____ (20)

_____

_____

_____

(21) **CERTIFICATE OF COMPLIANCE**

We certify that the statements in this Fabricator's Partial Data Report are correct and that all details of materials, construction, and workmanship of this vessel conform to Section X of the ASME BOILER AND PRESSURE VESSEL CODE, Fiber-Reinforced Plastic Pressure Vessels.

Date _____ Signed _____ (Fabricator) by _____ (representative)

Certificate of Authorization no. _____ Expires _____

(22) **CERTIFICATE OF SHOP INSPECTION**

I, the undersigned, holding a valid commission issued by the National Board of Boiler and Pressure Vessel Inspectors and employed by _____ of _____ have inspected the part of a pressure vessel described in this Fabricator's Partial Data Report on _____ (date) and state that, to the best of my knowledge and belief, the Fabricator has constructed this part in accordance with the applicable Sections of the ASME BOILER AND PRESSURE VESSEL CODE.

By signing this certificate, neither the Inspector nor his employer makes any warranty, expressed or implied, concerning the part described in this Fabricator's Partial Data Report. Furthermore, neither the Inspector nor his employer shall be liable in any manner for any personal injury or property damage or loss of any kind arising from or connected with this inspection.

Date _____

_____ (Authorized Inspector's signature) Commission _____ (National Board Authorized Inspector Number)

(07/17)

Copyright ASME International (BPVC)

Table AJ-3
Guide for Completing Form RP-2
(Revision C — 2013)

Reference to Circled Numbers in the Form	Description
(1)	Name and street address of Fabricator, i.e., maker of the vessel part covered in this report.
(2)	Name and address of Fabricator who will use the vessel part in making a complete vessel.
(3)	An identifying serial number marked on the vessel part by the part Fabricator (RS-120). This is not to be a National Board number. CRN line is for Canadian Registration Number and the number of the drawing approved by the Provincial Authorities.
(4)	Drawing to which vessel part is fabricated.
(5)	Organization that prepared drawing.
(6)	Description of vessel part, i.e., fitting, flat steel head, attached support bracket, etc.
(7)	ASME Code, Section X, Edition (e.g., 1998) and Addenda (e.g., A98, A99, etc., if applicable) used for fabrication.
(8)	All Code Case numbers and revisions used for fabrication must be listed. Where more space is needed, use Remarks section or list on a supplemental page.
(9)	Specify bag molded, centrifugally cast, or filament wound, or a combination of these, as bag molded and helically wound or centrifugally cast plus level (or circle) wound, if the design is a combination.
(10)	State the process or a combination of the processes along with the shape, as elliptical, spherical, etc., and list the ratio of major or minor axis if elliptical. If heads are flat (Article RD-7), list material and thickness.
(11)	The details of adhesive bonding, bolted, or quick opening to be recorded in the Data Report.
(12)	The top and bottom heads for vertical vessels and ends for horizontally mounted vessels.
(13)	Bolts used to secure removable head or heads of vessel.
(14)	Safety precautions to be spelled out for quick opening design (Article RD-8).
(15)	Show design of pole pieces wound in on axis of rotation. Show design of fittings and method of holding the fittings in place if located other than on axis of rotation (not permitted for 3,000 psi [20 MPa] operation design). In all cases, design adequacy is mandatory.
(16)	Indicate nozzle or other opening which is designated for pressure relief device.
(17)	Show other nozzles and openings and design of attachment.
(18)	Show openings designated for inspection and design of attachment.
(19)	Indicate provisions for vessel support. If attached, show design; vessels must be qualified on the vessel support listed in the Data Report.
(20)	It is important under Remarks to be very complete in listing concentration temperature of contents of the vessel along with surface of the vessel used to prevent corrosion. The Fabricator of the vessel line or resin along with Specification number and type is important for future reference, as vessel may be used for contents other than the contents for which the original design was intended.
(21)	Certificate of Compliance block is to show name of Fabricator of the vessel part and the Certification Mark authorization number, and expiration date. This should be signed by chief Inspector, Manager of Quality Control, or a like person.
(22)	Certificate of Shop Inspection is to be completed by the Fabricator and signed by the Authorized Inspector who performs the shop inspection.

GENERAL NOTE: Any quantity to which units apply shall be entered on the Fabricator's Partial Data Report with the chosen units.

Copyright ASME International (BPVC)

FORM RP-3
FABRICATOR'S DATA REPORT FOR CLASS II VESSELS
(Revision E — 2017)
As Required by the Provisions of the ASME Boiler and Pressure Vessel Code

1. Fabricated and certified by ① (name and address of Fabricator)
2. Fabricated for ② (name and address of Purchaser)
3. Location of installation ③ (name and address)
4. Type ④ (horiz. or vert. vessel) Vessel No. (Manufacturer's serial) (CRN) ⑤ (dwg. no.) ⑥ (National Bd. no.) Year Built
5. Vessel fabricated in accordance with Design Specification no. ⑦ Date
   and Procedure Specification no. Date
6. ASME Section X ⑧ [Edition and Addenda (if applicable) Date] ⑨ (Code Case No.)
7. (a) Vessel designed according to Method (A or B) (b) Fabricator's Design Report on file (yes or no)
   (c) (1) Elastic constants used for design according to Method A: E_x , E_y , E_s , ν_x
   (2) Elastic and strength constants used for design according to Method B. Add additional columns as required.

Structural layer from inside	1	2	3	4	5	6	7	8	9
Type of construction: mat. fil., wound, woven, roving, etc.									
Thickness									
Glass content									
E_x									
E_y									
E_s									
ν_x									
X									
X_c									
Y									
Y_c									
S									
Wind angle for fil. wound layers									

   (3) Effective laminate engineering constants for Method B analysis based on information in 7(c)(2) above. (See AD-509.)
   E_1 E_2 E_6 ν_{21} ν_{12} E_{f1} E_{f2}
8. (a) SHELL: Fibers (glass, carbon, aramid, etc.)
   Resins (epoxy, polyester, furan, phenolic, etc.)
   (b) HEADS: Fibers (glass, carbon, aramid, etc.)
   Resins (epoxy, polyester, furan, phenolic, etc.)
9. Fabricated for
   Maximum allowable working pressure ⑩ at maximum allowable temperature
   Minimum allowable temperature [when less than −20°F (−29°C)]
   Hydrostatic, pneumatic, or combination test pressure ⑪ . Total weight of completed vessel
   NDE (AE, RT, etc.)
10. SHELL: Type ⑫ (bag molded, centrif. cast, filament wound) Nominal thickness ⑬
    Diameter Length Barcol hardness ⑭
11. HEADS: Type ⑮ (contact molded, filament wound)
    Attachment ⑯ (integral, adhesive bonding, bolted, quick opening, etc.)

(a)	Location (Top, Bottom, Ends)	Nominal Thickness	Barcol Hardness	Nominal Weight	Shape or Contour (Describe, giving radii, angle, ratios, where appropriate)
(1)	⑰				
(2)					

(07/17)

Copyright ASME International (BPVC)

FORM RP-3 (Back)
(Revision E — 2017)

(b) If bolted, bolts used (Material, Spec. no., T.S., size, number) (18)
(1) _____
(2) _____

(c) If quick opening or other (describe or attach sketch) (19)
(1) _____
(2) _____

(d) If filament wound, describe pole pieces or head fittings (20)
(1) _____
(2) _____

12. SAFETY OR SAFETY RELIEF VALVE OUTLETS: Number _____ (21) Size _____
Location _____

13. NOZZLES (22)

Purpose (Inlet, Outlet, Drain)	Number	Diameter or Size	Type	Material	Thickness	Reinforcement Material	How Attached (Bonded or Integrally Attached)

Attached _____
(where and how)

14. INSPECTION OPENINGS: (23)
Manholes: No. _____ Size _____ Location _____
Handholes: No. _____ Size _____ Location _____

15. SUPPORTS: Skirt _____ (24) Lugs _____ Legs _____ Other _____
(yes or no) (number) (number) (describe)
Attached _____
(where and how)

16. VESSEL FABRICATED FOR STORAGE OF _____

17. REMARKS _____ (25)

(Brief description of purpose of the vessel, such as air tank, water tank, LPG storage, etc. *If description of the purpose of the vessel does not clearly indicate the contents of the vessel state what the contents are to be.* Describe any unusual features of design or construction not covered by items 3 to 16 inclusive.)

(26) **CERTIFICATE OF DESIGN**

Fabricator's Design Report on file at _____
Fabricator's Design Report certified by _____ PE State _____ (27) Reg. no. _____
We certify the statements in this Data Report to be correct.

Date _____ Signed _____ by _____
(Fabricator) (authorized representative)

Our Certificate of Authorization no. _____ to use the Certification Mark with RPDesignator expires _____
(date)

(28) **CERTIFICATE OF SHOP INSPECTION**

I, the undersigned, holding a valid commission issued by the National Board of Boiler and Pressure Vessel Inspectors and employed by _____ of _____ have inspected the pressure vessel described in this Fabricator's Data Report on _____ (date) and state that, to the best of my knowledge and belief, the Fabricator has constructed this pressure vessel in accordance with the applicable Sections of the ASME BOILER AND PRESSURE VESSEL CODE.

By signing this certificate, neither the Inspector nor his employer makes any warranty, expressed or implied, concerning the pressure vessel described in this Fabricator's Data Report. Furthermore, neither the Inspector nor his employer shall be liable in any manner for any personal injury or property damage or loss of any kind arising from or connected with this inspection.

Date _____

_____ Commission _____ (29)
(Authorized Inspector's signature) (National Board Authorized Inspector Number)

(07/17)

Copyright ASME International (BPVC)

Table AJ-4
Guide for Completing Form RP-3
(Revision F — 2017)

Reference to Circled Numbers in the Form	Description
(1)	Name and street address of Fabricator, i.e., maker of all components not covered by Partial Data Reports.
(2)	Name and address of Purchaser and/or Owner.
(3)	Name and street address of USER, where vessel is to be installed. If not known, so indicate; e.g., not known — built for stock.
(4)	Type of vessel, such as vertical or horizontal vessel, including method of support.
(5)	Fabricator's serial number (one vessel on one report). CRN lines are for Canadian Registration Number and the number of the drawing approved by the Provincial Authorities.
(6)	National Board number from Fabricator's series of N.B. numbers or State number if User inspected vessel.
(7) (10)	These are the Fabricator's Specification numbers.
(8)	ASME Code, Section X, Edition (e.g., 1998) and Addenda (e.g., A98, A99, etc., if applicable) used for fabrication.
(9)	All Code Case numbers and revisions used for fabrication must be listed. Where more space is needed, use Remarks section or list on a supplemental page.
(11)	Test Pressure must conform to RT-450 or RT-460, depending on type of test method used.
(12)	Specify contact molded, centrifugally cast, or filament wound, or a combination of these, as contact molded and helically wound, if the design is a combination.
(13)	The thickness of the laminate. Spell out liner thickness (if used) as a separate item.
(14)	The Barcol hardness is required for qualification vessels (RT-221) and recorded.
(15)	State the process or a combination of the processes along with the shape, as elliptical, spherical, etc., and list the ratio of major to minor axis if elliptical. If heads are flat (Article RD-7), list material and thickness.
(16)	The details of adhesive bonding, bolted, or quick opening to be recorded in the Data Report.
(17)	The top and bottom heads for vertical vessels and ends for horizontally mounted vessels.
(18)	Bolts used to secure removable head or heads of vessel.
(19)	Safety precautions to be spelled out for quick opening design (Article RD-8).
(20)	Show design of pole pieces wound in on axis of rotation. Show design of fittings and method of holding the fittings in place if located other than on axis of rotation [not permitted for 3,000 psi (20 MPa) operation design]. In all cases, design adequacy is mandatory.
(21)	Indicate nozzle or other opening which is designated for pressure relief device.
(22)	Show other nozzles and openings and design of attachment.
(23)	Show openings designated for inspection and design of attachment.
(24)	Indicate provisions for vessel support. If attached, show design; vessels must designed with support listed in the Data Report.
(25)	It is important under Remarks to be very complete in listing concentration temperature of contents of the vessel along with surface of the vessel used to prevent corrosion. The Fabricator of the vessel line or resin along with Specification number and type is important for future reference, as vessel may be used for contents other than the contents for which the original design was intended. For attached Partial Data Reports, list the part name, the name of the Fabricator, and the serial number of the part.
(26)	This certificate is to be completed by the Fabricator to show the disposition of the Fabricator's Design Report and to identify the registered Professional Engineer who certifies it.
(27)	State of the U.S.A.; or province of Canada, if applicable.
(28)	Certificate of Shop Inspection is to be completed by the Fabricator and signed by the Authorized Inspector who performs the shop inspection of the completed vessel.
(29)	The National Board Authorized Inspector number shall be shown.

GENERAL NOTE: Any quantity to which units apply shall be entered on the Fabricator's Data Report with the chosen units.

Copyright ASME International (BPVC)

FORM RP-4
FABRICATOR'S PARTIAL DATA REPORT FOR CLASS II VESSELS
A Part of a Fiber-Reinforced Plastic Pressure Vessel Fabricated by One Fabricator for Another Fabricator
(Revision D — 2017)
As Required by the Provisions of the ASME Boiler and Pressure Vessel Code

1. (a) Fabricated and certified by ① (name and address of Fabricator of part)

   (b) Fabricated for ② (name and address of Purchaser of vessel)

2. Identification—Fabricator's serial no. of part ③

3. (a) Constructed according to Drawing no. ④ Dwg. prepared by ⑤

   (b) Description of part fabricated and inspected ⑥

4. Part fabricated in accordance with Procedure Specification no. _____ Date _____

5. ASME Section X ⑦ (Edition and Addenda (if applicable) Date) ⑧ (Code Case No.)

6. SHELL: Type ⑨ (contact molded, filament wound) Nominal thickness _____ Fibers _____ (glass, etc.) Resin _____ (epoxy, etc.)

   Nominal weight _____ Diameter _____

   Length _____ Barcol hardness _____

7. HEADS: Type ⑩ (contact molded, centrifugally cast, filament wound)

   Attachment ⑪ (integral, adhesive bonding, bolted, quick opening, etc.)

(a)

	Location (Top, Bottom, Ends)	Nominal Thickness	Barcol Hardness	Nominal Weight	Shape or Contour (Describe, giving radii, angle, ratios, where appropriate)
(1)	⑫				
(2)					

(b) If bolted, bolts used ⑬ (Material, Spec. no., T. S., size, number)

(1) _____

(2) _____

(c) If quick opening or other ⑭ (Describe or attach sketch)

(1) _____

(2) _____

(d) If filament wound, describe pole pieces or head fittings ⑮

(1) _____

(2) _____

8. Fabricated for

   Maximum allowable working pressure _____ at maximum allowable temperature _____

   Minimum allowable temperature [when less than −20°F (−29°C)] _____

9. NDE _____ (AE, RT, etc.)

10. SAFETY VALVE OUTLETS: Number ⑯ Size _____ Location _____

11. NOZZLES ⑰

Purpose (Inlet, Outlet, Drain)	Number	Diameter or Size	Type	Material	Thickness	Reinforcement Material	How Attached

(07/17)

Copyright ASME International (BPVC)

FORM RP-4 (Back)
(Revision D — 2017)

12. INSPECTION OPENINGS (18)

Manholes: No. _____ Size _____ Location _____
Handholes: No. _____ Size _____ Location _____
Threaded: No. _____ Size _____ Location _____

13. SUPPORTS: (19) Skirt _____ (yes or no) Lugs _____ (number) Legs _____ (number) Other _____ (describe)

Attached _____ (where and how)

14. REMARKS (20) _____

(21) CERTIFICATE OF COMPLIANCE

We certify that the statements made in this Fabricator's Partial Data Report are correct and that all details of materials, fabrication, and workmanship of this vessel conform to Section X of the ASME BOILER AND PRESSURE VESSEL CODE, Fiber-Reinforced Plastic Pressure Vessels, Class II.

Date _____ Signed _____ (Fabricator) by _____ (representative)

Certificate of Authorization no. _____ Expires _____ (date)

(22) CERTIFICATE OF SHOP INSPECTION

I, the undersigned, holding a valid commission issued by the National Board of Boiler and Pressure Vessel Inspectors and employed by _____ of _____ have inspected the part of a pressure vessel described in this Fabricator's Partial Data Report on _____ (date) and state that, to the best of my knowledge and belief, the Fabricator has constructed this part in accordance with the applicable Sections of the ASME BOILER AND PRESSURE VESSEL CODE.

By signing this certificate, neither the Inspector nor his employer makes any warranty, expressed or implied, concerning the part described in this Fabricator's Partial Data Report. Furthermore, neither the Inspector nor his employer shall be liable in any manner for any personal injury or property damage or loss of any kind arising from or connected with this inspection.

Date _____

_____ (Authorized Inspector's signature) Commission _____ (National Board Authorized Inspector Number)

(07/17)

Copyright ASME International (BPVC)

Table AJ-5
Guide for Completing Form RP-4
(Revision C — 2013)

Reference to Circled Numbers in the Form	Description
(1)	Name and street address of Fabricator, i.e., maker of the vessel part covered in this report.
(2)	Name and address of Fabricator who will use the vessel part in making a complete vessel.
(3)	An identifying serial number marked on the vessel part by the part Fabricator (RS-120). This is not to be a National Board number. CRN line is for Canadian Registration Number and the number of the drawing approved by the Provincial Authorities.
(4)	Drawing to which vessel part is fabricated.
(5)	Organization that prepared drawing.
(6)	Description of vessel part, i.e., fitting, flat steel head, attached support bracket, etc.
(7)	ASME Code, Section X, Edition (e.g., 1998) and Addenda (e.g., A98, A99, etc., if applicable) used for fabrication.
(8)	All Code Case numbers and revisions used for fabrication must be listed. Where more space is needed, use Remarks section or list on a supplemental page.
(9)	Specify contact molded or filament wound, or a combination of these, as contact molded and helically wound, if the design is a combination.
(10)	State the process or a combination of the processes along with the shape, as elliptical, spherical, etc., and list the ratio of major or minor axis if elliptical. If heads are flat (Article RD-7), list material and thickness.
(11)	The details of adhesive bonding, bolted, or quick opening to be recorded in the Data Report.
(12)	The top and bottom heads for vertical vessels and ends for horizontally mounted vessels.
(13)	Bolts used to secure removable head or heads of vessel.
(14)	Safety precautions to be spelled out for quick opening design (Article RD-8).
(15)	Show design of pole pieces wound in on axis of rotation. Show design of fittings and method of holding the fittings in place if located other than on axis of rotation [not permitted for 3,000 psi (20 MPa) operation design]. In all cases, design adequacy is mandatory.
(16)	Indicate nozzle or other opening which is designated for pressure relief device.
(17)	Show other nozzles and openings and design of attachment.
(18)	Show openings designated for inspection and design of attachment.
(19)	Indicate provisions for vessel support. If attached, show design; vessels must be qualified on the vessel support listed in the Data Report.
(20)	It is important under Remarks to be very complete in listing concentration temperature of contents of the vessel along with surface of the vessel used to prevent corrosion. The Fabricator of the vessel line or resin along with Specification number and type is important for future reference, as vessel may be used for contents other than the contents for which the original design was intended.
(21)	Certificate block is to show name of Fabricator of the vessel part and the Certification Mark, authorization number, and expiration date. This should be signed by chief Inspector, Manager of Quality Control, or a like person.
(22)	Certificate of Shop Inspection is to be completed by the Fabricator and signed by the Authorized Inspector who performs the shop inspection.

GENERAL NOTE: Any quantity to which units apply shall be entered on the Fabricator's Partial Data Report with the chosen units.

Copyright ASME International (BPVC)

FORM RP-5 FABRICATOR'S DATA REPORT SUPPLEMENTARY SHEET
(Revision C — 2017)
As Required by the Provisions of the ASME Code Rules, Section X

1. Fabricated and certified by ① (Name and address of Fabricator)

2. Fabricated for ② (Name and address of Purchaser)

3. Location of installation ③ (Name and address)

4. Type ④ (Horiz., vert., or sphere) _____ (Tank, separator, etc.) _____ ⑤ (Fabricator's Serial No.)

CRN _____ (Drawing No.) _____ ⑥ (Nat'l. Board No.) _____ (Year built) _____

Data Report Item Number	Remarks
	⑦

Certificate of Authorization: ⑧ Type _____ No. _____ Expires _____

Date _____ Name _____ (Fabricator) Signed _____ (Representative)

Date _____ Name _____ (Authorized Inspector) Commission ⑨ _____ (National Board Authorized Inspector Number)

(07/17)

Copyright ASME International (BPVC)

Table AJ-6
Guide for Completing Form RP-5
(Revision C — 2017)

Reference to Circled Numbers in the Form	Description
(1)	Name and street address of Fabricator.
(2)	Name and address of Purchaser and/or Owner.
(3)	Name and address of USER, where vessel is to be installed. If not known, built for stock.
(4)	Type of vessel, such as vertical or horizontal.
(5)	Fabricator's serial number.
(6)	National Board Number from Fabricator's series of N.B. Numbers.
(7)	Fill in information for which there was insufficient space on the Data Report Form as indicated by the notation "See attached Form RP-5" on the Data Report Form.
(8)	Fill in information identical to that shown on the Data Report Form to which this sheet is supplementary. Indicate the type of Certificate of Authorization, number, expiration date, and signature of company representative.
(9)	The National Board Authorized Inspector number shall be shown.

GENERAL NOTE: Any quantity to which units apply shall be entered on the Manufacturer's Data Report with the chosen units.

Copyright ASME International (BPVC)

NONMANDATORY APPENDIX AK
LAMINA ELASTIC CONSTANTS — MICROMECHANICS

AK-100 LAMINA ELASTIC CONSTANTS

The laminate analysis method detailed in Article RD-12 includes the use of the five elastic constants of each lamina (layer) of a laminate. The elastic constants of each lamina are required for determination of the laminate stiffness coefficients in accordance with Article RD-12. The elastic constants of each lamina can be determined by testing in accordance with Article RT-7. Alternatively, the elastic constants of each lamina may be determined in accordance with this Nonmandatory Appendix. The procedures detailed in this Article are commonly referred to as micromechanics.

The five elastic constants that must be determined for each lamina are the longitudinal modulus, transverse modulus, shear modulus, major Poisson's ratio, and minor Poisson's ratio.

AK-200 NOMENCLATURE

The symbols used in this Article are defined below.

E_f = tensile modulus of the fiber
E_m = tensile modulus of the resin matrix
E_x = Young's modulus of an orthotropic lamina in the principal direction of the greater modulus
E_y = Young's modulus of an orthotropic lamina in the principal direction of the lesser modulus
G_f = shear modulus of the fiber
G_m = shear modulus of the matrix
G_s = shear modulus of an orthotropic lamina in the principal coordinates
SG_f = relative density of fiber
SG_r = relative density of resin matrix
t = thickness of the lamina, in. (mm)
V_f = volume fraction of fiber
v_f = volume of fiber per unit area, $in.^3/ft^2$ (m^3/m^2)
V_m = volume fraction of matrix
v_m = volume of resin matrix per unit area, $in.^3/ft^2$ (m^3/m^2)
W = fiber weight of the lamina per unit area, oz/ft^2 (kg/m^2)
W_f = weight fraction of fiber
Δ = factor related to Poisson's ratios = $1 - \nu_x\nu_y$
ν_f = Poisson's ratio of the fiber
ν_m = Poisson's ratio of the matrix
ν_x = principal Poisson's ratio of a lamina. It is the negative of strain in the *y* direction from the stress in the *x* direction
ν_y = minor Poisson's ratio of a lamina. It is the negative of strain in the *x* direction from the stress in the *y* direction
= $\nu_x \times E_y/E_x$
ρ_c = density of the composite
ρ_f = density of the fiber, $lb/in.^3$ (kg/m^3)
ρ_m = density of the resin matrix

AK-300 PRELIMINARY CALCULATIONS

Typically, the weight per unit area of the fiber reinforcement is known, as are the densities of the fiber and resin matrix. If the laminate physically exists, the layer thickness can be measured. If the laminate does not physically exist, then either the thickness or the fiber weight fraction of the lamina is assumed and verified after fabrication.

Note that the thickness and fiber weight fraction of the lamina are related by:

Copyright ASME International (BPVC)

(U.S. Customary Units)

$$t = \frac{W}{83}\left(\frac{1}{SG_f} + \frac{1 - W_f}{W_f \times SG_m}\right) \tag{1a}$$

(SI Units)

$$t = W\left(\frac{1}{SG_f} + \frac{1 - W_f}{W_f \times SR_m}\right) \tag{1b}$$

(U.S. Customary Units)

$$v_f = \frac{W}{16\rho_f} \tag{2a}$$

(SI Units)

$$v_f = \frac{W}{\rho_f} \tag{2b}$$

(U.S. Customary Units)

$$v_m = t144 - v_f \tag{3a}$$

(SI Units)

$$v_m = \frac{t}{1\,000} - v_f \tag{3b}$$

$$V_f = \frac{v_f}{v_m + v_f} \tag{4}$$

$$V_m = 1 - V_f \tag{5}$$

$$W_f = \frac{V_f \times \rho_f}{V_f \times \rho_f + \left(1 - V_f\right)\rho_m} \tag{6}$$

$$\rho_c = \rho_m\left(1 - V_f\right) + \rho_f \times V_f \tag{7}$$

$$G_m = \frac{E_m}{2(1 + v_m)} \tag{8}$$

$$G_f = \frac{E_f}{2\left(1 + v_f\right)} \tag{9}$$

AK-400 MICROMECHANICS EQUATIONS FOR A UNIDIRECTIONAL LAYER

The following micromechanics equations apply to a unidirectional layer:

$$K_f = \frac{E_f}{2\left(1 - v_f - 2{v_f}^2\right)} \tag{10}$$

Copyright ASME International (BPVC)

$$K_m = \frac{E_m}{2\left(1 - v_m - 2{v_m}^2\right)} \tag{11}$$

$$K_T = \frac{K_m\left(K_f + G_m\right)V_m + K_f\left(K_m + G_m\right)V_f}{\left(K_f + G_m\right)V_m + \left(K_m + G_m\right)V_f} \tag{12}$$

$$E_x = E_m V_m + E_f V_f + \frac{4 \times (v_f - v_m)^2 V_m V_f}{\frac{V_m}{K_f} + \frac{V_f}{K_m} + \frac{1}{G_m}} \tag{13}$$

$$v_x = v_m V_m + v_f V_f + \frac{(v_f - v_m)\left(\frac{1}{K_m} - \frac{1}{K_f}\right)V_m V_f}{\frac{V_m}{K_f} + \frac{V_f}{K_m} + \frac{1}{G_m}} \tag{14}$$

$$\gamma = \frac{G_f}{G_m} \tag{15}$$

$$\eta_m = 3 - 4v_m \tag{16}$$

$$\eta_f = 3 - 4v_f \tag{17}$$

$$A = 3V_f \times {V_m}^2\left(\gamma - 1\right)\left(\gamma + \eta_f\right) + \left[\gamma \times \eta_m + \eta_f \times \eta_m - \left(\gamma \times \eta_m - \eta_f\right){V_f}^3\right]\left[V_f \times \eta_m \times (\gamma - 1) - (\gamma \times \eta_m + 1)\right] \tag{18}$$

$$\begin{aligned} B = {} & -3V_f \times {V_m}^2\left(\gamma - 1\right)\left(\gamma + \eta_f\right) + \frac{1}{2}\left[\gamma \times \eta_m + \left(\gamma - 1\right)V_f + 1\right]\left[\left(\eta_m - 1\right)\left(\gamma + \eta_f\right) - 2\left(\gamma \times \eta_m - \eta_f\right){V_f}^3\right] \\ & + \frac{V_f}{2}(\eta_m + 1)(\gamma - 1)\left[\gamma + \eta_f + \left(\gamma \times \eta_m - \eta_f\right){V_f}^3\right] \end{aligned} \tag{19}$$

$$C = 3V_f \times {V_m}^2\left(\gamma - 1\right)\left(\gamma + \eta_f\right) + \left[\gamma \times \eta_m + \left(\gamma - 1\right)V_f + 1\right] + \left[\gamma + \eta_f + \left(\gamma \times \eta_m - \eta_f\right){V_f}^3\right] \tag{20}$$

$$G_{yz} = \frac{-G_m\left[\left(4B^2 - 4AC\right)^{0.5} + 2B\right]}{2A} \tag{21}$$

$$m = 1 + \frac{4K_T \times {v_x}^2}{E_x} \tag{22}$$

$$E_y = \frac{4K_T \times G_{yz}}{K_T + m \times G_{yz}} \tag{23}$$

Copyright ASME International (BPVC)

$$G_s = G_m + \frac{V_f}{\frac{1}{G_f - G_m} + \frac{V_m}{2G_m}} \tag{24}$$

$$v_y = v_x \times \frac{E_y}{E_x} \tag{25}$$

NOTE: Knitted or woven fabric layers can be treated as two or three individual layers of unidirectional reinforcement. For example, a layer of woven roving can be treated as two layers of unidirectional reinforcement, one at 0 deg and one at 90 deg with the appropriate weights of reinforcement in the respective directions, and with thicknesses in each direction proportioned to the weights. A layer of woven roving can also be treated as three layers of unidirectional reinforcement, e.g., 0 deg/90 deg/0 deg, again with appropriate weights and thicknesses in the respective directions.

AK-500 MICROMECHANICS OF A RANDOMLY DISTRIBUTED, FIBER-REINFORCED LAMINA

For a lamina with randomly distributed fibers (e.g., chopped strand mat layer), the number of required elastic constants reduces from five to three as there is just one Young's modulus value and one Poisson's ratio. The three elastic constants are determined by first calculating fictitious properties for a continuous, unidirectional lamina with the thickness and weight of reinforcement in accordance with RD-1330. The average properties are then calculated by integrating over all directions from 0 deg to 180 deg. This results in the following equations:

$$E = \frac{{E_y}^2 + 2E_y \times E_x + 4E_y \times G_s\Delta + {E_x}^2 + 4E_x \times G_s\Delta - 4{v_x}^2 \times {E_y}^2 + 8v_x \times E_y \times G_s\Delta}{\left(3E_y + 3E_x + 2v_x \times E_y + 4G_s \times \Delta\right)\Delta} \tag{26}$$

$$v = \frac{E_x + E_y - 4G_s \times \Delta + 6v_x \times E_y}{3E_y + 3E_x + 2v_x \times E_y + 4G_s \times \Delta} \tag{27}$$

$$G = \frac{1}{8} \times \frac{E_x}{\Delta} + \frac{1}{8} \times \frac{E_y}{\Delta} - \frac{1}{4}\left(\frac{v_x \times E_y}{\Delta}\right) + \frac{1}{2}G_s \tag{28}$$

where

$$\Delta = 1 - v_x \times v_y \tag{29}$$

AK-501 EXAMPLE 1

Determine the five elastic constants (in U.S. Customary units) for a unidirectional layer with the following inputs:
Lamina reinforcement weight: W = 4.36 oz/ft^2
Specific gravity of resin: SG_m = 1.126
Specific gravity of fiber: SG_f = 2.62
Modulus of resin matrix: E_m = 465,000 psi
Poisson's ratio of matrix: v_m = 0.35
Modulus of fiber: E_f = 11.1 × 10^6 psi
Poisson's ratio of fiber: v_f = 0.22
(a) Preliminary Calculations. Using the values from AK-501, perform the preliminary calculations as follows:
Density of the resin: ρ_m = 0.0361 × SG_m= 0.0406 lb/in.^{3}
Density of the fiber: ρ_f = 0.0361 × SG_f = 0.0946 lb/in.^{3}
Lamina thickness in inches (assume W_f = 0.70):

$$W_f = 0.70$$

$$t = \frac{W}{83}\left(\frac{1}{SG_f} + \frac{1 - W_f}{W_f \times SG_m}\right) = 0.04$$

Copyright ASME International (BPVC)

Volume of fiber:

$$v_f = \frac{W}{16\rho_f} = 2.8811 \text{ in.}^3/\text{ft}^2$$

Volume of resin:

$$v_m = t \times 144 - v_f = 2.885 \text{ in.}^3/\text{ft}^2$$

Volume fraction of the fiber:

$$V_f = \frac{v_f}{v_f + v_m} = 0.4996$$

Volume fraction of the resin:

$$V_m = 1 - V_f = 0.5004$$

Density of the composite:

$$\rho_c = V_f \times \rho_f + \left(1 - V_f\right)\rho_m = 0.0676 \text{ lb/in.}^3$$

(b) Fiber and Matrix Properties. Use values from (a) and AK-501 to determine fiber and matrix properties.

Shear modulus of matrix:

$$G_m = \frac{E_m}{2(1 + v_m)} = 1.722 \times 10^5 \text{ psi}$$

Shear modulus of fiber:

$$G_f = \frac{E_f}{2\left(1 + v_f\right)} = 4.549 \times 10^6 \text{ psi}$$

(c) Micromechanics Equations for a Unidirectional Composite

$$K_f = \frac{E_f}{2\left(1 - v_f - 2{v_f}^2\right)} = 8.124 \times 10^6$$

$$K_m = \frac{E_m}{2\left(1 - v_m - 2{v_m}^2\right)} = 5.741 \times 10^5$$

$$K_T = \frac{K_m\left(K_f + G_m\right) \times V_m + K_f\left(K_m + G_m\right) \times V_f}{\left(K_f + G_m\right)V_m + \left(K_m + G_m\right)V_f} = 1.196 \times 10^6$$

Modulus in fiber direction:

$$E_x = E_m \times V_m + E_f \times V_f + \frac{4(v_f - v_m)^2 \times V_m \times V_f}{\frac{V_m}{K_f} + \frac{V_f}{K_m} + \frac{1}{G_m}} = 5.781 \times 10^6 \text{ psi}$$

Copyright ASME International (BPVC)

Major Poisson's ratio:

$$v_x = v_m \times V_m + v_f \times V_f + \frac{\left(v_f - v_m\right)\left(\frac{1}{K_m} - \frac{1}{K_f}\right) \times V_m \times V_f}{\frac{V_m}{K_f} + \frac{V_f}{K_m} + \frac{1}{G_m}} = 0.277$$

where

$$A = 3V_f \times {V_m}^2\left(\gamma - 1\right)\left(\gamma + \eta_f\right) + \left[\gamma \times \eta_m + \eta_f\eta_m - \left(\gamma \times \eta_m - \eta_f\right){V_f}^3\right]\left[V_f\,\eta_m\left(\gamma - 1\right) - \left(\gamma \times \eta_m + 1\right)\right] = -660.568$$

$$B = -3V_f \times {V_m}^2\left(\gamma - 1\right)\left(\gamma + \eta_f\right) + \frac{1}{2}\left[\gamma \times \eta_m + (\gamma - 1) \times V_f + 1\right]\left[(\eta_m - 1)(\gamma + \eta_f) - 2\left(\gamma \times \eta_m - \eta_f\right) \times {V_f}^3\right] + \frac{V_f}{2}\left(\eta_m + 1\right)\left(\gamma - 1\right)\left[\gamma + \eta_f + \left(\gamma\eta_m - \eta_f\right){V_f}^3\right] = 480.401$$

$$C = 3V_f{V_m}^2\left(\gamma - 1\right)\left(\gamma + \eta_f\right) + \left[\gamma \times \eta_m + \left(\gamma - 1\right) \times V_f + 1\right]\left[\gamma + \eta_f + \left(\gamma \times \eta_m - \eta_f\right) \times {V_f}^3\right] = 2.149 \times 10^3$$

$$\gamma = \frac{G_f}{G_m}$$

$$\eta_f = 3 - 4v_f = 2.12$$

$$\eta_m = 3 - 4v_m = 1.6$$

Transverse shear modulus:

$$G_{yz} = \frac{-G_m\left[\left(4B^2 - 4AC\right)^{0.5} + 2B\right]}{2A} = 4.602 \times 10^5 \text{ psi}$$

$$m = 1 + \frac{4K_T \times {v_x}^2}{E_x} = 1.064$$

Transverse modulus:

$$E_y = \frac{4K_TG_{yz}}{K_T + mG_{yz}} = 1.306 \times 10^6 \text{ psi}$$

In-plane shear modulus:

$$G_s = G_m + \frac{V_f}{\frac{1}{G_f - G_m} + \frac{V_m}{2G_m}} = 4.694 \times 10^5 \text{ psi}$$

Minor Poisson's ratio:

$$V_y = V_x \times \frac{E_y}{E_x} = 0.063$$

Copyright ASME International (BPVC)

The following is the summary of properties:

Summary of Properties

Elastic Constants for Lamina	Calculated Values
Modulus in direction of fiber	$E_x = 5.781 \times 10^6$ psi
Modulus transverse to fiber	$E_y = 1.306 \times 10^6$ psi
In-plane shear modulus	$G_s = 4.694 \times 10^5$ psi
Major Poisson's ratio	$\upsilon_x = 0.277$
Minor Poisson's ratio	$\upsilon_y = 0.063$

AK-502 EXAMPLE 2

Determine the three elastic constants (in U.S. Customary units) for a randomly oriented layer with the same inputs as in Example 1 except for the following:

Lamina reinforcement weight: $W = 1.50$ oz/ft^2

Assumed weight fraction of fiber: $W_f = 0.326$

(a) Preliminary Calculations. Using the values from AK-502, perform the preliminary calculations as follows:

Lamina thickness:

$$t = \frac{W}{83}\left(\frac{1}{SG_f} + \frac{1 - W_f}{W_f \times SG_m}\right) = 0.04 \text{ in.}$$

Volume of fiber:

$$v_f = \frac{W}{16p_f} = 0.9912 \text{ in.}^3/\text{ft}^2$$

Volume of resin:

$$\nu_m = t144 - \nu_f = 4.78 \text{ in.}^3/\text{ft}^2$$

Volume fraction of the fiber:

$$V_f = \frac{v_f}{v_f + v_m} = 0.1717$$

Volume fraction of the resin:

$$V_m = 1 - V_f = 0.8283$$

Density of the composite:

$$\rho_c = V_f \times \rho_f + \left(1 - V_f\right) \times \rho_m = 0.0499 \text{ lb/in.}^3$$

(b) Fiber and Matrix Properties. Use values from (a) and AK-502 to determine fiber and matrix properties.

Shear modulus of matrix:

$$G_m = \frac{E_m}{2(1 + v_m)} = 1.722 \times 10^5 \text{ psi}$$

Shear modulus of fiber:

$$G_f = \frac{E_f}{2\left(1 + v_f\right)} = 4.549 \times 10^6 \text{ psi}$$

(c) Calculation of fictitious Properties for a Continuous, Unidirectional Lamina

$$K_f = \frac{E_f}{2\left(1 - v_f - 2{v_f}^2\right)} = 8.124 \times 10^6$$

Copyright ASME International (BPVC)

$$K_m = \frac{E_m}{2\left(1 - v_m - 2{v_m}^2\right)} = 5.741 \times 10^5$$

$$K_T = \frac{K_m\left(K_f + G_m\right) \times V_m + K_f\left(K_m + G_m\right) \times V_f}{\left(K_f + G_m\right)V_m + \left(K_m + G_m\right)V_f} = 7.123 \times 10^5$$

Modulus in fiber direction:

$$E_x = E_m \times V_m + E_f \times V_f + \frac{4(v_f - v_m)^2 \times V_m V_f}{\frac{V_m}{K_f} + \frac{V_f}{K_m} + \frac{1}{G_m}} = 2.293 \times 10^6 \text{ psi}$$

Major Poisson's ratio:

$$v_x = v_m \times V_m + v_f \times V_f + \frac{\left(v_f - v_m\right)\left(\frac{1}{K_m} - \frac{1}{K_f}\right) \times V_m V_f}{\frac{V_m}{K_f} + \frac{V_f}{K_m} + \frac{1}{G_m}} = 0.323$$

where

$$A = 3V_f \times {V_m}^2 \times \left(\gamma - 1\right)\left(\gamma + \eta_f\right) + \left[\gamma \times \eta_m + \eta_f \eta_m - \left(\gamma \times \eta_m - \eta_f\right){V_f}^3\right] \times \left[V_f \times \eta_m\left(\gamma - 1\right) - \left(\gamma \times \eta_m + 1\right)\right] = -1.393 \times 10^3$$

$$B = -3V_f \times {V_m}^2 \times \left(\gamma - 1\right)\left(\gamma + \eta_f\right) + \frac{1}{2}\left[\gamma \times \eta_m + (\gamma - 1) \times V_f + 1\right] \times \left[(\eta_m - 1)(\gamma + \eta_f) - 2\left(\gamma \times \eta_m - \eta_f\right) \times {V_f}^3\right] + \frac{V_f}{2} \times \left(\eta_m + 1\right)\left(\gamma - 1\right) \times \left[\gamma + \eta_f + \left(\gamma \times \eta_m - \eta_f\right){V_f}^3\right] = 304.772$$

$$C = 3V_f \times {V_m}^2 \times \left(\gamma - 1\right)\left(\gamma + \eta_f\right) + \left[\gamma \times \eta_m + \left(\gamma - 1\right) \times V_f + 1\right] \times \left[\gamma + \eta_f + \left(\gamma \times \eta_m - \eta_f\right) \times {V_f}^3\right] = 1.625 \times 10^3$$

$$\gamma = \frac{G_f}{G_m}$$
$$\eta_f = 3 - 4v_f = 2.12$$
$$\eta_m = 3 - 4v_m = 1.6$$

Transverse shear modulus:

$$G_{yz} = \frac{-G_m\left[\left(4B^2 - 4AC\right)^{0.5} + 2B\right]}{2A} = 2.275 \times 10^5 \text{ psi}$$

$$m = 1 + \frac{4K_T \times {v_x}^2}{E_x} = 1.13$$

Transverse modulus:

$$E_y = \frac{4K_T G_{yz}}{K_T + mG_{yz}} = 6.688 \times 10^5 \text{ psi}$$

Copyright ASME International (BPVC)

In-plane shear modulus:

$$G_s = G_m + \frac{V_f}{\frac{1}{G_f - G_m} + \frac{V_m}{2G_m}} = 2.374 \times 10^5 \text{ psi}$$

Minor Poisson's ratio:

$$\nu_y = \nu_x \times \frac{E_y}{E_x} = 0.094$$

(d) Properties for a randomly oriented fiber layer:

$$\Delta = 1 - \nu_x \times \nu_y$$

$$E = \frac{{E_y}^2 + 2E_y \times E_x + 4E_y \times G_s \times \Delta + {E_x}^2 + 4E_x \times G_s \times \Delta - 4{\nu_x}^2 \times {E_y}^2 + 8\nu_x \times E_y \times G_s \times \Delta}{\left(3E_y + 3E_x + 2\nu_x \times E_y + 4G_s \times \Delta\right)\Delta} = 1.18 \times 10^6$$

$$\nu = \frac{E_x + E_y - 4G_s \times \Delta + 6\nu_x \times E_y}{3E_y + 3E_x + 2\nu_x \times E_y + 4G_s \times \Delta} = 0.326$$

$$G = \left[\frac{1}{8} \times \frac{E_x}{\Delta} + \frac{1}{8} \times \frac{E_y}{\Delta} - \frac{1}{4}\left(\frac{\nu_x \times E_y}{\Delta}\right) + \frac{1}{2}G_s\right] = 4.449 \times 10^5$$

The following is the summary of properties:

Summary of Properties

Elastic Constants for Lamina	Calculated Values
Modulus	E = 1.18 × 10 ^{6} psi
Shear modulus	G_s = 4.449 × 10^5 psi
Poisson's ratio	υ_x = 0.326

Copyright ASME International (BPVC)

NONMANDATORY APPENDIX AL
FIRE AND EXCESSIVE HEAT EXPOSURE GUIDANCE

AL-100 GENERAL

This Appendix provides guidance to Owners or Users of fiber-reinforced plastic (FRP) pressure vessels to mitigate the effects of fire and exposure to excessive heat on FRP vessels covered by this Section. Composite laminates rapidly lose strength at temperatures above 250°F to 400°F (121°C to 204°C), depending on the resin used or if they are burning. In addition, the insulating properties of laminates reduce the temperature increase of the vessel contents. Hence, the vessel pressure may not increase sufficiently to actuate a relief device before there is a through-wall leak or, worse, a sudden failure of the vessel wall. For these reasons, it is recommended that owners of FRP equipment take all precautions necessary to prevent fire exposure or excessive heat to the structural wall of the vessel. While the vessel itself may not contain a flammable substance, it could be sited in an area in which a fire may start due to leakage of a flammable fluid resulting in a pool fire, electrical fire, or chemical fire or could be struck by lightning. A massive release is the worst-case scenario that could damage nearby equipment and injure, with possible death, nearby personnel. This situation requires that exposure of FRP vessels to fire or excessive heat be minimized. The National Board Inspection Code provides guidance on continued use and repair of FRP vessels exposed to excessive heat or fire.

AL-200 SUGGESTED METHODS TO MITIGATE FIRE EXPOSURE

AL-201 ISOLATION FROM FIRE OR EXCESSIVE HEAT SOURCES

If possible, the vessel shall be sited away from any potential fire or excessive heat source, such as from flammable fluids that may leak and catch fire, electrical equipment that can catch fire due to shorts or overloads, and reactive chemicals that can cause excessive heat, and shall be properly grounded against lightning strikes if sited outdoors.

AL-202 PROTECTIVE COATINGS AND INSULATION

The simplest method of mitigating fire or excessive heat exposure is to coat or insulate the exposed surfaces with either an intumescent coating or a heat- or fire-resistant insulation jacket. These shall be added after the vessel is inspected and marked with the RP Certification Mark; otherwise, such coatings and insulation will interfere with the final inspection of the vessel. The thickness and type of coating and/or insulation are dependent on the type of fire or level of heat exposure, and the duration of exposure; the thickness and type of coating and/or insulation shall be specified by a qualified insulation and coatings specialist. (This is outside the scope of Section X.) There are fire-retardant resins that are available, but they only retard the spread of the fire and do not increase the resistance of the vessel wall to degradation from exposure to a fire.

Where vessels are fully buried underground or leak detection is also desired, a double-walled insulated vessel can be constructed.

Any vessel potentially exposed to fire shall have the supports (skirt, legs, lugs, saddles, etc.) fireproofed. For skirts made of the same material as the vessel wall, both the inside and outside shall be fireproofed. Such fireproofing methods shall meet federal, state, and local building codes.

AL-203 AUTOMATIC SPRINKLER OR DELUGE SYSTEMS

If it is expected that fire exposure will be of a long duration outlasting the protective ability of a coating or insulation, or there are no insulation or coating systems, then an automatically actuated sprinkler or deluge system should be added to cool the vessel wall. Design shall meet the requirements of the NFPA 13 or other local building codes.

AL-204 BELOW-GRADE INSTALLATION

Any vessel that contains a heavier than air flammable fluid shall be installed below grade in a concrete vault or else be buried with a double wall. In addition, any buried flammable fluid piping shall also be double walled in such cases. Where vessels and piping are buried, they shall be designed to resist any external loads, earth loads, and high water table buoyancy loads, if any. This shall apply only to horizontal vessels or very short vertical vessels. The vault or double wall shall be equipped with leak detection instrumentation. The National Board Inspection Code currently recommends installation above ground or below grade in a vault for high pressure gaseous hydrogen composite storage vessels. Above-ground installation for

Copyright ASME International (BPVC)

other lighter than air gaseous flammable fluids can also be considered. However, all such above-ground vessels shall be protected by an automatic sprinkler or deluge system.

AL-205 BLOW-DOWN VENTING

During exposure to fire, there could be a localized hot spot in the vessel wall that could fail despite the application of fire protection coatings, insulation, and devices. For this reason and the fact that the relief device may not actuate because the MAWP has not been reached, it is advisable in some cases to install an automatically actuated vent valve on the vessel to blow the contents down to a safe area in the event of a fire. If the pressure in the vessel is released prior to a failure of the wall, there is less likelihood of a sudden release of the contents.

Copyright ASME International (BPVC)

ENDNOTES

1 By *lethal fluids* is meant poisonous gases or liquids of such a nature that a very small amount of the gas or of the vapor of the liquid, mixed or unmixed with air, is dangerous to life when inhaled. For purposes of the Code, this class includes substances of this nature which are stored under pressure or may generate a pressure if stored in a closed vessel.

2 Requirements for pressure vessels for human occupancy are covered by ASME PVHO-1.

3 Wherever the word *User* appears in this Section, it shall be considered to include an agent acting in his behalf. The *agent* may be the Fabricator when multiple duplicate vessels are being fabricated.

4 A glossary of terms used in fiber-reinforced plastic pressure vessel fabrication is given in Mandatory Appendix 4.

5 Matched-die-method parts are acceptable under this Section as being equivalent to bag-molded parts when using the same type of fiber reinforcement and the same resin system.

6 Sudden cyclic changes in temperature shall be part of the design consideration.

7 An exception to this one-sixth value is permitted for vessels per RG-404.2 (Filament Winding — With Uncut Filaments), where the maximum combined stress value may be one-fifth of maximum membrane stress.

8 *Nominal pipe size (NPS)* is a designation assigned for the purpose of convenient specification of pipe size. The actual inside and outside dimensions are listed in ANSI B36.10M.

9 Diameters of vessels and sizes of openings are nominal.

10 The governing principle in the design and fabrication of a Class II vessel is the establishment of the Procedure Specification (Form Q-120) at the time of design and the strict observance of the Procedure Specification during fabrication. The engineering constants of laminate materials upon which the design is based, and from which fabrication will occur, are determined using a mathematical treatment known as laminate theory. Laminate theory utilizes the orthotropic properties of the individual lamina (based on the specific resin–fiber combination), ply sequence, and ply orientations identified in the Procedure Specification to determine the stiffness coefficients and effective elastic properties of the resultant laminate.

The Procedure Specification is qualified by observance of the mandatory design rules of this Article and strict observance of the Procedure Specification during fabrication (as documented by quality control records) to assure that the combinations of resin, reinforcement, ply sequence, and ply orientation upon which the design was based are followed during fabrication.

The structural integrity of the vessel is confirmed by individual acceptance testing of each vessel using acoustic emission monitoring.

11 An example of these calculations appears in Nonmandatory Appendix AD.

12 Random short length is that produced by cutter blades with not less than 1 in. (25 mm) nor more than 4 in. (100 mm) spacing.

13 See Article RT-2 for detailed requirements governing the conducting of these checks and tests.

14 Essential variables shall be held within tolerances established in the Procedure Specification.

15 Essential variables shall be held within tolerances established elsewhere in this Section.

16 *Set to operate* means the set pressure of a pressure relief valve or a spring-loaded nonreclosing device, the bursting pressure of a rupture disk device, or the breaking pressure of a breaking pin device.

17 SNT-TC-1A-1992 Edition, Recommended Practice for Personnel Qualification and Certification in Nondestructive Testing.

18 The water jacket method described in pamphlet C-1, published by the Compressed Gas Association, Inc., 1235 Jefferson Davis Highway, Arlington, VA 22202, may be used.

19 In the case of vessel designs that have not been previously qualified, it is recommended that a preliminary hydrostatic qualification pressure test in accordance with RT-223.1(a)(3) be carried out before the cyclic pressure and qualification pressure test of a prototype vessel is conducted.

20 During the cyclic pressure test, the minimum presure shall be the lower of 20% of design pressure or 30 psig (0.270 MPa).

21 If polyester is being used, the surface of the repaired area may be covered with cellophane or other suitable nonpermeable film to retard evaporation of monomer.

22 The maximum allowable external working pressure is required only when specified as a design condition.

Copyright ASME International (BPVC)

23 Wherever the word “stamp” or “stamping,” referring to the Certification Mark to be applied to the vessel (but not to safety or safety relief devices), appears in this Section, it may be construed to mean marking the vessel nameplate with the Certification Mark with RP Designator by means other than a steel stamp (see RS-130 and RS-131).

24 Knowing the official rating capacity of a safety valve that is stamped on the valve, it is possible to determine the overall value of *KA* in either of the following equations in cases where the value of these individual terms is not known:

Official Rating in Steam	Official Rating in AIr
$KA = W_S/51.5P$	$KA = \left(\frac{W_a}{CP}\right)\sqrt{T/M}$

This value for *KA* is then substituted in the above equations to determine the capacity of the safety valve in terms of the new gas or vapor.

25 Holiday is defined as a discontinuity, such as a pinhole, void, crack, thin spot, foreign inclusion, or contaminant in the laminate.

26 Yield is measured in yards per pound and is furnished by the fiber producer. The constant (1.125) in the equation is a function of the reinforcement content and the resin specific gravity. The normal variation of fiberglass content in filament winding is from 60% to 75% by weight.

27 The equations in Article AA-2 are for isotropic materials only. Any deviation from such materials will require modifications of the equations.

28 This construction has the further advantage of not transmitting discharge-pipe strains to the valve. In these types of installations, the back-pressure effect will be negligible, and no undue influence upon normal valve operation can result.

29 Note that $3/\beta$ = 9.07 in., which is less than the length L = 10 in.; by AC-231(b), $B_{11} = B_{12} = 1$, $B_{22} = 2$, and $G_{11} = G_{12} = G_{22} = 0$, which have been used above.

Copyright ASME International (BPVC)

2019 ASME Boiler and Pressure Vessel Code

AN INTERNATIONAL CODE

Since its first issuance in 1914, the ASME Boiler and Pressure Vessel Code (BPVC) has been a flagship for modern international standards development. Each new edition reaffirms ASME's commitment to enhance public safety and encourage technological advancement to meet the needs of a changing world. Sections of the BPVC have been incorporated into law in the United States and Canada, and are used in more than 100 countries. The BPVC has long been considered essential within the electric power generation, petrochemical, and transportation industries, among others.

ASME also provides BPVC users with integrated suites of related offerings, including

- referenced standards
- related standards and guidelines
- conformity assessment programs
- personnel certification programs
- learning and development solutions
- ASME Press books and journals

You gain unrivaled insight direct from the BPVC source, along with the professional quality and real-world solutions you have come to expect from ASME.

For additional information and to order:
Phone: 1.800.THE.ASME
(1.800.843.2763)
Email: customercare@asme.org
Website: go.asme.org/bpvc

ISBN 978-0-7918-7291-8

9 780791 872918

900100

--`,,```,,,,````-`-`,,`,,`,`,,`---

Copyright ASME International (BPVC)